MAHINDRA
TRACTORS

Parts Catalogue

MAHINDRA 2541 4WD

MAHINDRA
TRACTORS

FOREWORD

We are pleased to present 1st edition of the parts catalogue for our MAHINDRA 2541 4WD tractor.

This parts catalogue has been specially designed to meet user's requirement & expectation and deals exclusively with Engine, Power steering , Sheet Metal, Electrical and Hydraulic components fitted on our MAHINDRA 2541 4WD tractor.

The parts catalogue will help you in ordering parts and also will give an idea of assembly sequence.

We have taken utmost care in developing this catalogue and we sincerely believe that our patron's will find this book useful.

We will be happy to receive suggestions, if any, on this catalogue.

Contact us at:
Parts support
Mahindra China Inc.
Parts Ph. No: 00867187997
Parts Fax No: 00867187997
Product Support Ph No.:00867187997

Index

Aggregate:	Sub Aggregate	Description
Engine	Air Intake System	Air Intake System 2-3
	Exhaust System	Exhaust Manifold and Silencer 4-5
	Cooling System	Cooling Water Pump & Fan 6-7
		Radiator & Hoses 8-9
	Main Parts	Cylinder Head and Cover 10-15
		Cylinder Block, Flywheel Housing and Liner 16-19
		Front Cover and Plate 20-21
		Lubricating Oil Sump 22-23
		Hydraulic Pump Bracket and Gear 24-25
	Valve System	Camshaft, Tappet and Push Rod 26-27
	Crank Group	Crankshaft and Flywheel 28-29
	Piston & Sleeves	Piston, Connecting Rod and Cylinder Liner 30-31
	Lubrication System	Lubricating Oil Pump 32-33
		Lubricating Oil Filter 34-35
	Fuel System	Fuel Injection Pump, Injector & Fuel System 36-37
		Fuel Filter 38-39
Section :	Throttle Linkages	
Throttle Linkages	Throttle Controls & Linkages 42-43	
Section :	Clutch	
Clutch	Clutch Cover and Pressure Plate 46-47	
	Clutch Pedal & Connections 48-49	
Section :	Front Axle	
Front Axle	Front Axle and Wheel Hub 52-57	
	Front Differential and Bracket 58-63	
Section :	Description	
Power Steering	PSU, Steering Wheel, Steering Cylinder and Pipings 66-69	
Section :	Transmission	
Transmission	Front Housing, F-R Shifter and Speed Shifter Mechanism 72-77	

Index

Section :	Transmission	
Transmission	Gears and Shafts	78-83
	Transfer Case and Drive Shaft	84-89
	Power Take Off	90-95
Differential	Rear Axle Housing and Levers	96-99
	Differential Gears and Shaft	100-103
Rear Axle	Rear Axle	104-105
Section :	**Brakes**	
Brakes	Disc Brakes	108-111
	Brake Pedal and Linkages&Parking Brake	112-115
Section :	**Wheels and Tires**	
Wheels and Tires	Front Wheels and Tyre	116-117
	Rear Wheels, Tyre and Weights	118-119
Section :	**Seat**	
Seat and ROPS	Seat	122-123
	Safety Frame ROPS	124-125
Section :	**Sheet Metal & Electrical System**	
Sheet Metal & Electrical System	Hood and Instrument Panel	128-131
	Floor And Fenders	132-135
	Fuel Tank	136-137
	Stickers	138-139
	Electric System	140-141
Section :	**Hydraulics**	
Hydraulics & Three Point Linkage	Hydraulic Lift Cover	144-147
	Distributor	148-153
	Three Point Linkage	154-155
	Hydraulic Pump & Pipes	156-157
Section :	**Attachments**	
Attachments	Swinging Drawbar	160-161
	Front Weight	162-163

MAHINDRA
TRACTORS

Engine

ENGINE

Air Intake System

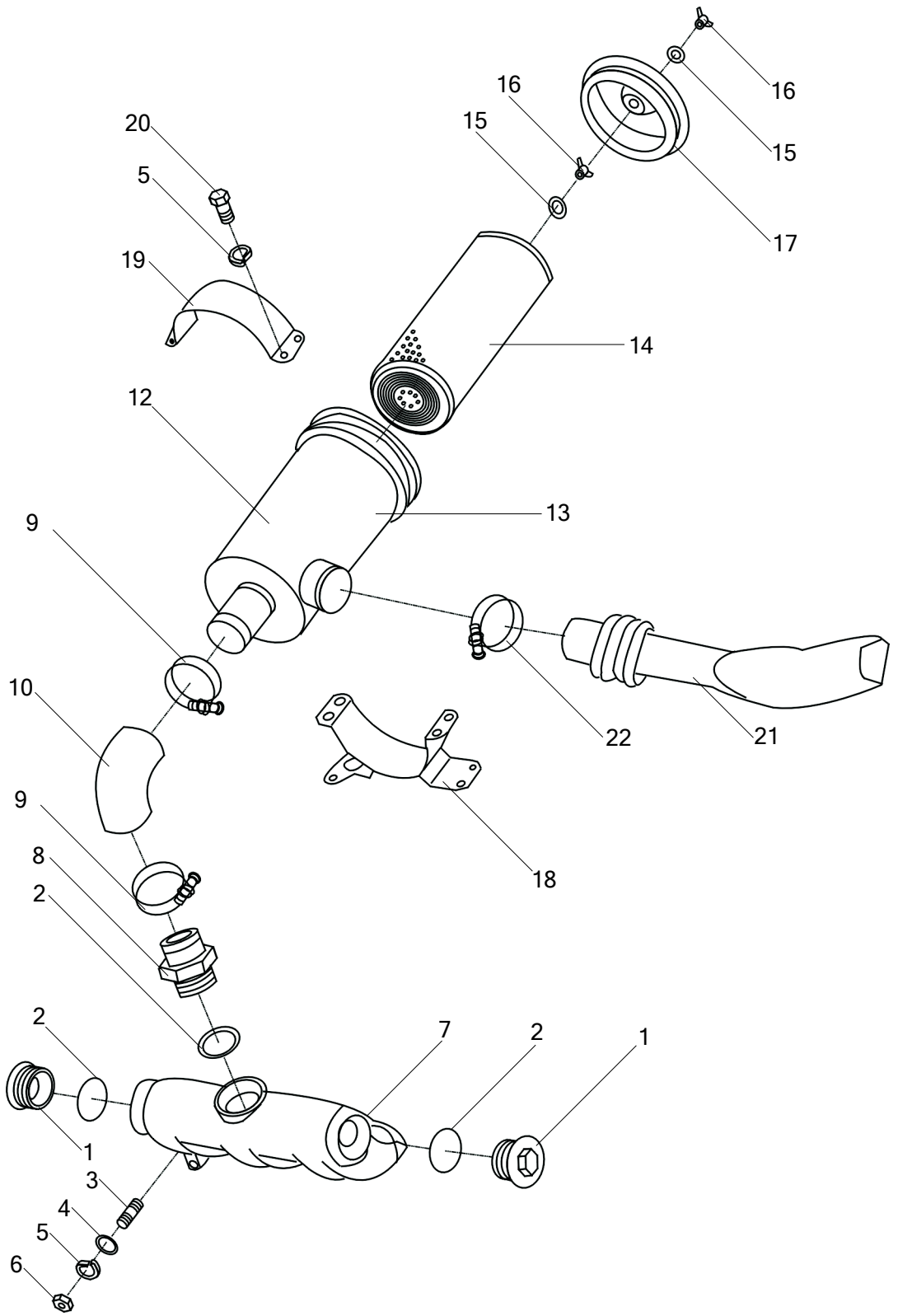

MUSA Part Number	Ref.	Description of Part	Unit Quantity	Remarks/ Service Bulletin No.
1008104DAA	1	Inlet Manifold Cap	2	
G1235765531	2	O-Ring	3	
G89888AM816	3	Stud	4	
G97858200HV	4	Washer	3	
G93878	5	Washer	13	
G617086M86	6	Nut	10	
1008101DAA	7	Inlet Manifold	1	
1008103DAF	8	Inlet Manifold Joint	1	
1008150DAF	9	Clip	2	
1008105DAF	10	Inlet Manifold Elbow	1	
1109100DAF	11	Air Cleaner Assy(optional) Consists of:	1	
‡	12	→ Air-Cleaner Housing	1	
‡	13	→ Seal	1	
1109150DAF	14	→ Air-Cleaner Filter Element	1	
‡	15	→ Washer	2	
‡	16	→ Nut	2	
‡	17	→ Air Cleaner Cover	1	
1109051DAF	18	Air Cleaner Support	1	
1009012DAF	19	Air Cleaner Brace	1	
G578386M816	20	Bolt	4	
1109011DAG	21	Short pipe	1	
Q6766464	22	Clip	1	

Exhaust Manifold and Silencer

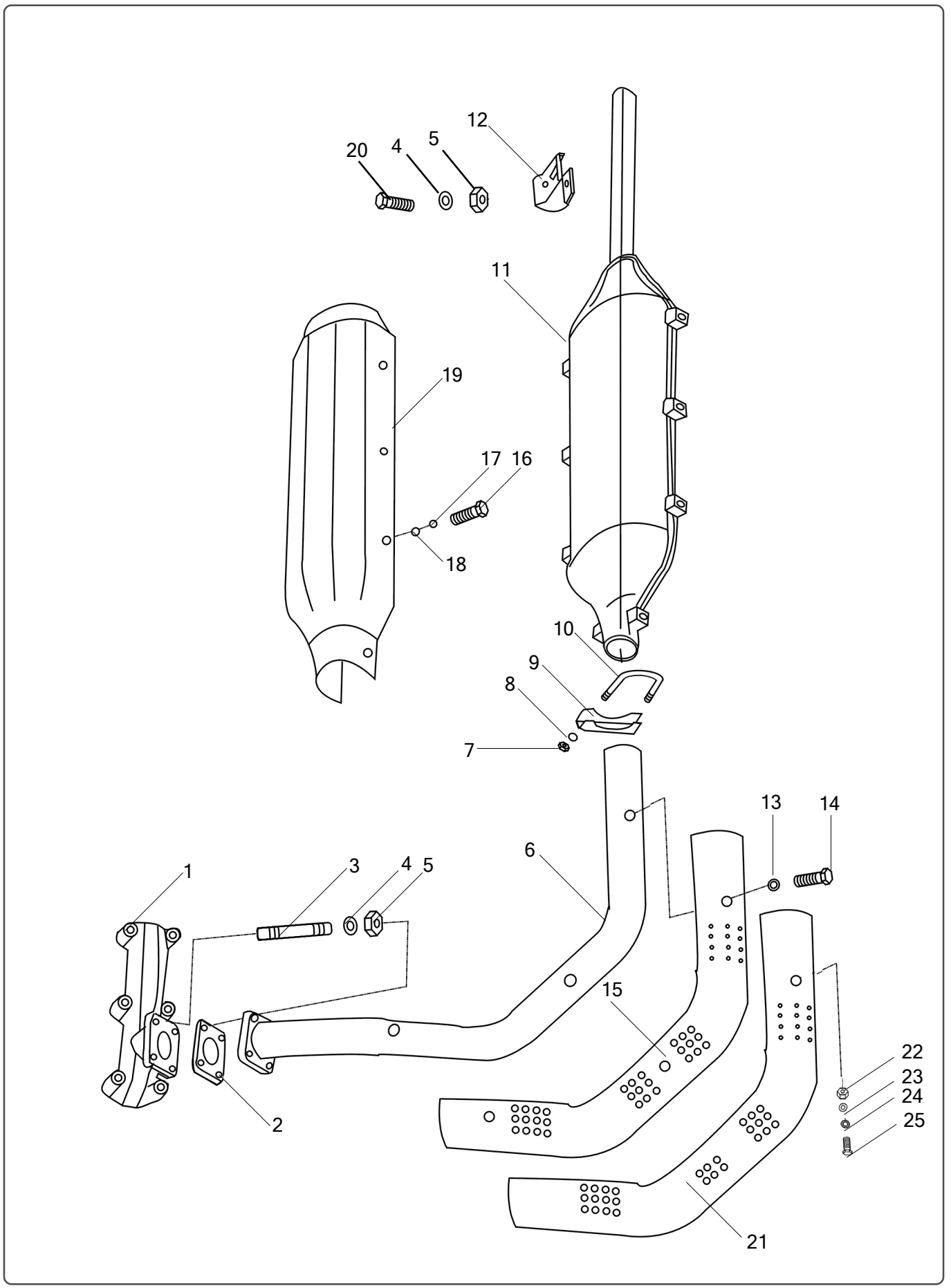

Exhaust Manifold and Silencer

MUSA Part Number	Ref.	Description of Part	Unit Quantity	Remarks/ Service Bulletin No.
1008201DAG	1	Exhaust Manifold	4	
1008050DAA	2	Gasket	1	
G89888AM820	3	Stud	4	
G93878	4	Washer	8	
G617086M8	5	Nut	8	
1203011DAQ	6	Exhaust syphon	1	
G617086M6	7	Nut	2	
G93876	8	Washer	5	
1201011DAG	9	Clip seat	1	
1201012DAG	10	U Clip	1	
1201100DAG	11	Muffler assy	1	
1201013DAH	12	Clamp	1	
G93876	13	Washer	3	
G578386M612	14	Bolt	3	
1203011DAQ	15	Isolator	1	
G578386M612	16	Bolt	4	
G93876	17	Washer	4	
G97866200HV	18	Washer	10	
1201050DAG	19	Cover	1	
G578286M835	20	Bolt	1	
1203012DAQ	21	Isolator	1	
GB170-86	22	Nut	8	
GB97.2-86	23	Washer	8	
GB93-87	24	Washer	8	
GB170-86	25	Bolt	8	

Cooling Water Pump & Fan

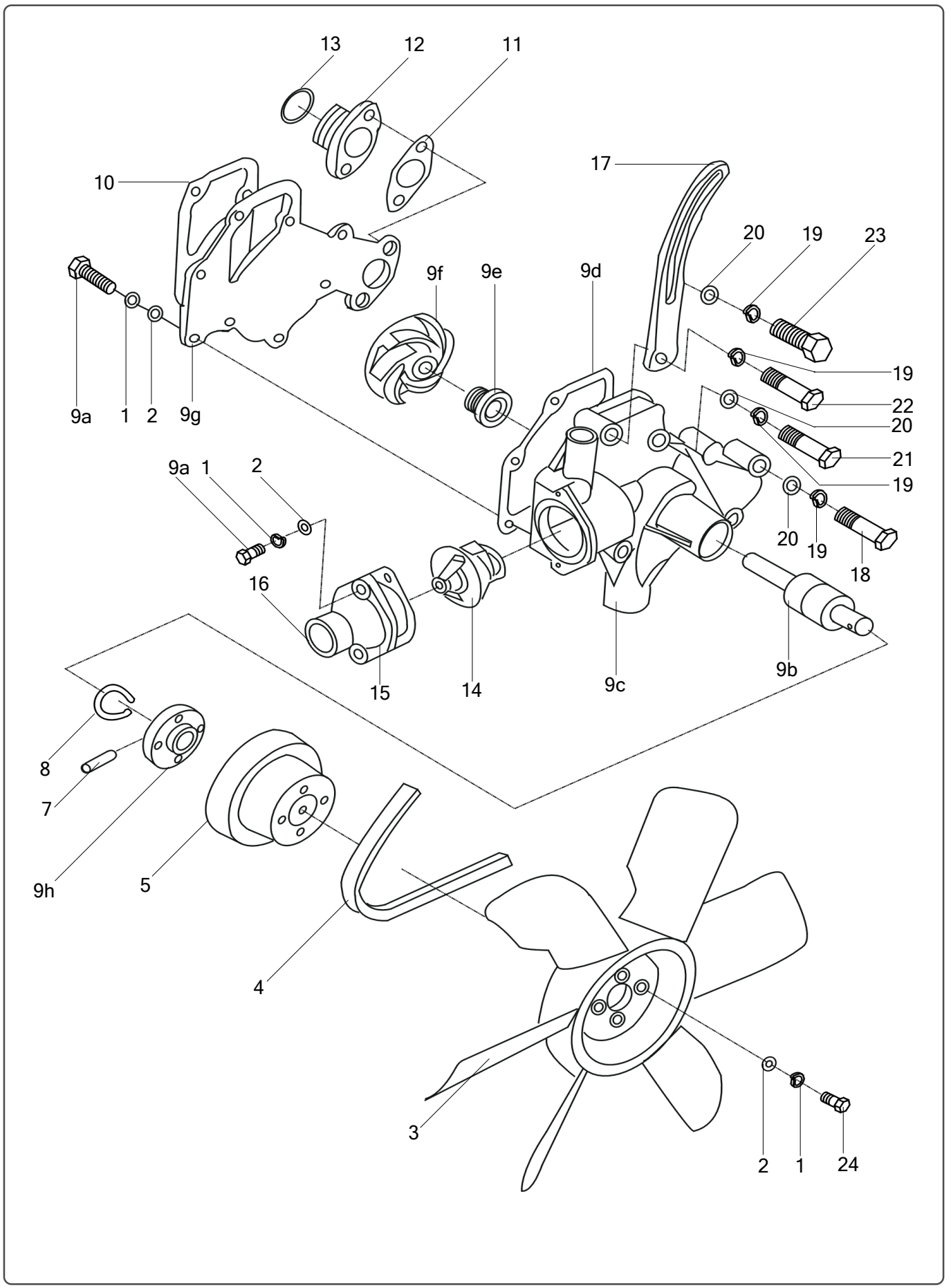

MUSA Part Number	Ref.	Description of Part	Unit Quantity	Remarks/ Service Bulletin No.
G93876	1	Washer	10	
G97856	2	Washer	10	
1308001DAA	3	Fan	1	
1307012DAB	4	Fan Belt	1	
1307011DAA	5	Water Pump Belt Pulley	1	
G11786428	7	Pin	1	
G8938630	8	Circlip	1	
1307100DAA	9	Water Pump Assly Consisting of :		
G578386M616	9a	► Bolt	6	
‡	9b	►Water Pump Shaft and Bearing	1	
1307101DAA	9c	►Pump Body	1	
1307103DAA	9d	►Gasket	1	
‡	9e	►Water Seal IIIF-13	1	
1307102DAA	9f	►Pump Impeller	1	
1307104DAA	9g	►Water Pump Cover	1	
1307105DAA	9h	►Belt-Pulley Hub	1	
1307013DAA	10	Gasket	1	
1307107DAA	11	Gasket	1	
1307106DAA	12	Outlet Flange	1	
G1235763231	13	O - Ring	1	
1307180DAA	14	Thermostat 155B	1	
1307108DAA	15	Gasket	1	
1307109DAA	16	Thermostat Cover	1	
1307014DAA	17	Brace	1	
G578286M840	18	Bolt	2	
G93878	19	Washer	6	
G97858200HV	20	Washer	5	
G578286M845	21	Bolt	2	
G578286M850	22	Bolt	1	
G578386M820	23	Bolt	1	
G578386M620	24	Bolt	6	

Radiator & Hoses

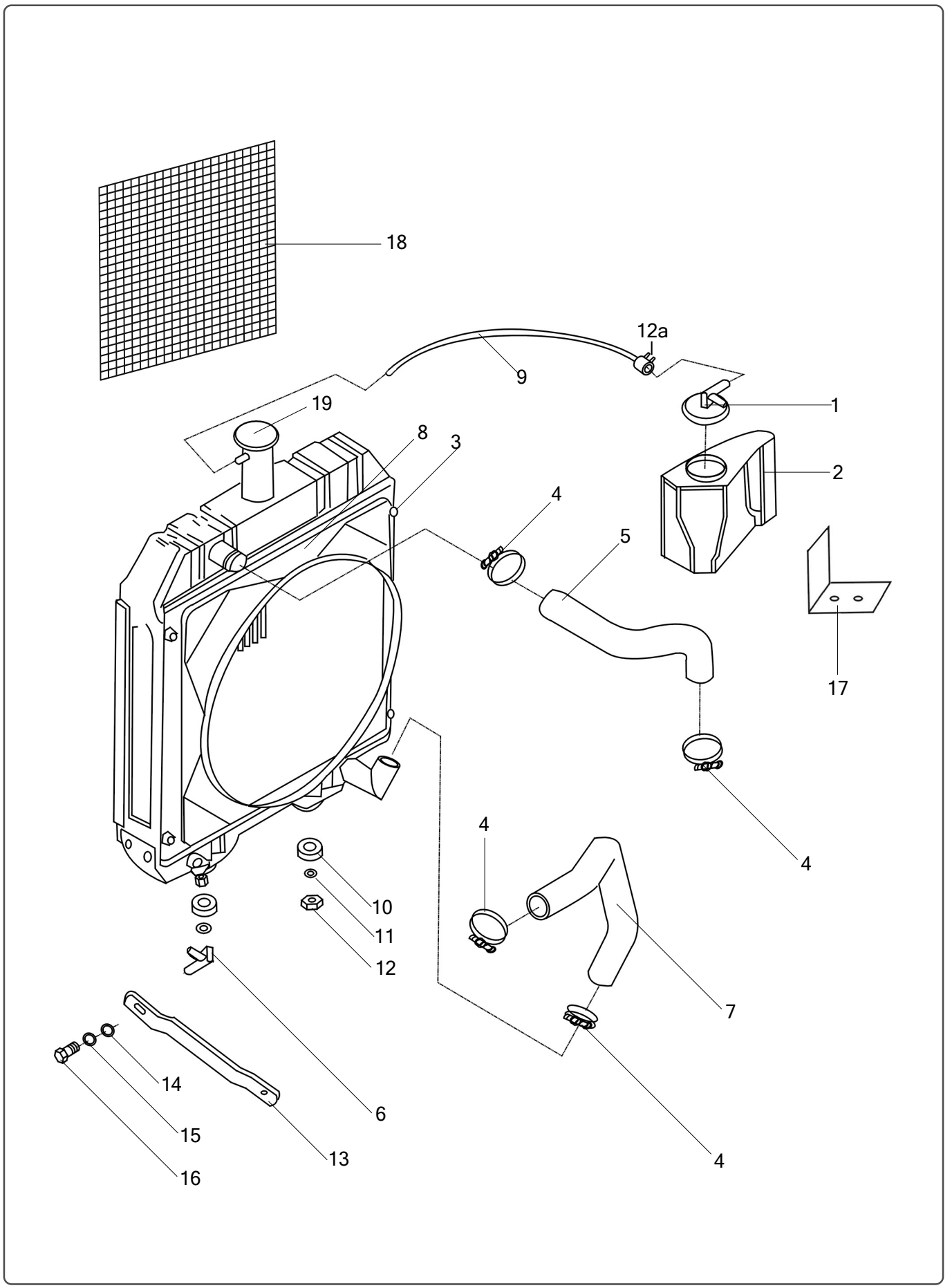

MUSA Part Number	Ref.	Description of Part	Unit Quantity	Remarks/ Service Bulletin No.
1303001DAG	*	Radiator Assy	1	
‡	1	Cover	1	
1301050DAG	2	Subwater tank	1	
1301100DAG02	3	Radiator Assy	1	
ZBT320058840	4	▶Clip	4	
1303011DAA	5	▶Outlet pipe	1	
‡	6	▶Valve	1	
1303012DAG	7	▶Inlet pipe	1	
1301011DAA	8	▶Cover	1	
1301015DAL	9	▶Pipe	1	
1301014DAG	10	▶Gasket	2	
G978512	11	▶Washer	2	
G617086M12	12	▶Nut	2	
Q673B09	12a	▶Clip	2	
1301012DAG	13	Bracket	1	
G97858	14	Washer	1	
G93878	15	Washer	1	
G578386M12	16	Screw	1	
1301013DAS	17	Bracket	1	
1301160DAG	18	Net-Cover	1	
1301015DAG	19	Cap	1	

Cylinder Head and Cover

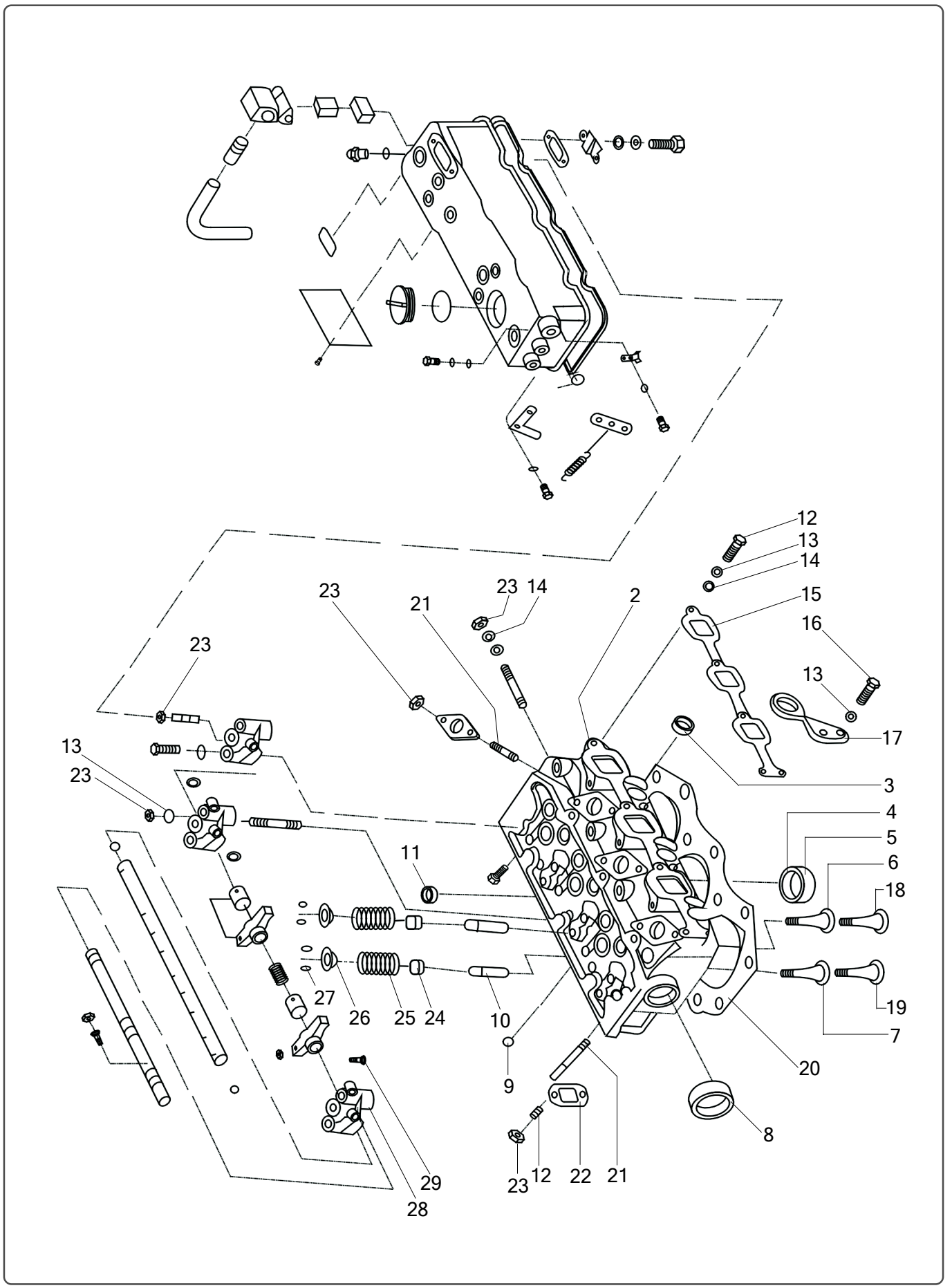

MUSA Part Number	Ref.	Description of Part	Unit Quantity	Remarks/ Service Bulletin No.
1003100DAA	1	Cylinder Head Assy Consists of:	1	
1003101DAA	2	→ Cylinder Head	1	
1003114DAA	3	→ Plug	3	
1003106DAA	4	→ Whirl Chamber Insert	3	
G308843	5	→ Ball	3	
1003102DAA	6	→ Intake Valve Seat	3	
1003103DAA	7	→ Exhaust Valve Seat	3	
1003115DAA	8	→ Plug	1	
1003112DAA	9	→ Plug	3	
1003104DAA	10	→ Valve Guide	6	
1003113CAA	11	→ Plug	3	
G89888AM825	12	Stud	3	
G93878	13	Washer	22	
G97858	14	Washer	4	
1008014DAA	15	Intake Manifold Gasket	1	
G578386M830	16	Bolt	2	
1003022DAL	17	Lifting Eye	2	
1003011DAA	18	Intake Valve	3	
1003012DAA	19	Exhaust Valve	3	
1002060DAA	20	Cylinder Head Gasket	1	
G89888AM855	21	Stud	10	
1008060DAA01C	22	Exhaust Manifold Gasket	3	
G617086M86	23	Nut	16	
1003060DAA	24	Valve Stem Seal	6	
1003013DAA	25	Valve Spring	6	
1003017DAA	26	Valve Spring Upper Seat	6	
1003018CAA	27	Valve Collets	12	
1007103DAA	28	Rocker Bracket (Back)	1	
1007107DAA	29	Adjusting Screw	6	

Cylinder Head and Cover

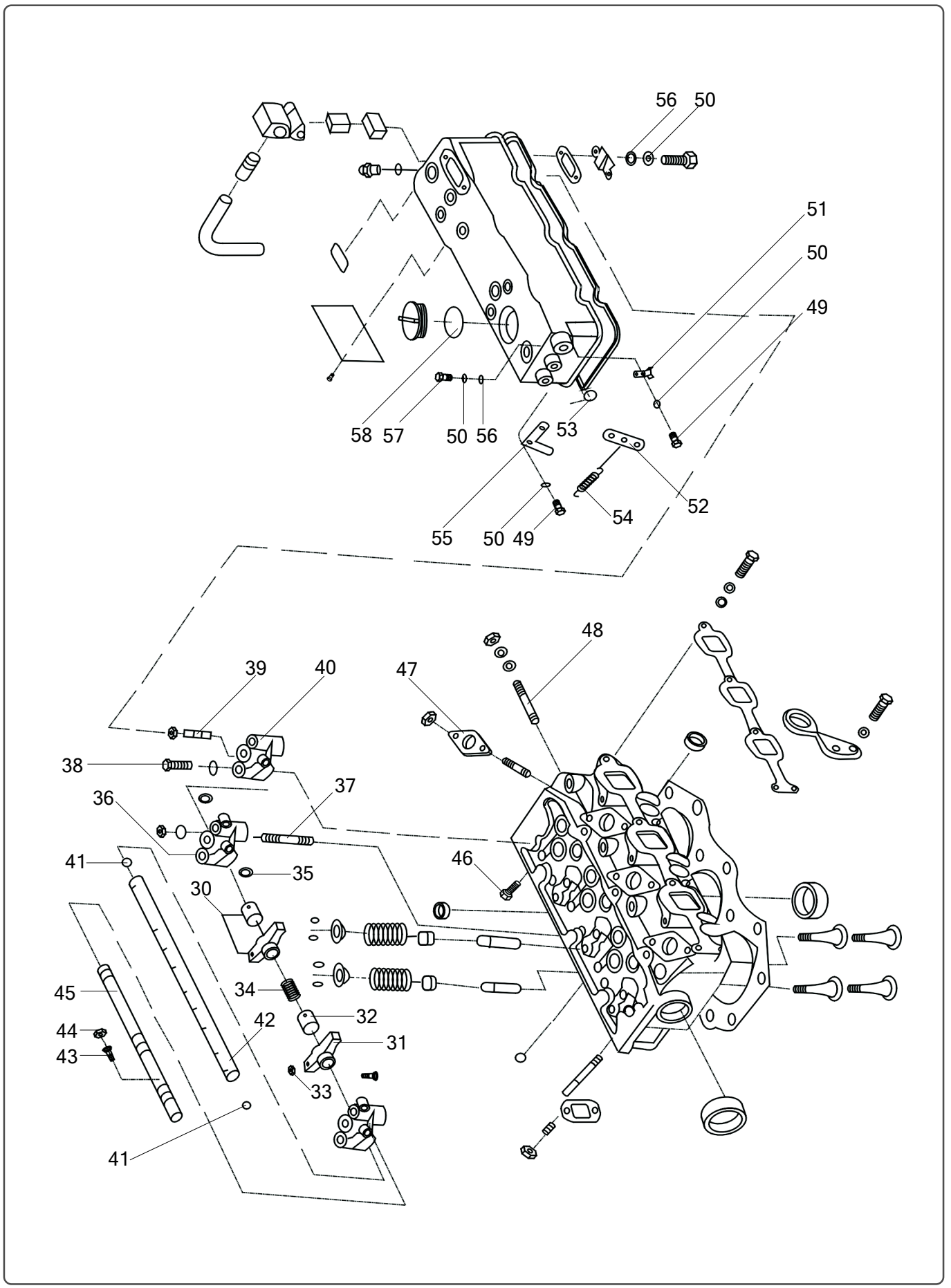

MUSA Part Number	Ref.	Description of Part	Unit Quantity	Remarks/ Service Bulletin No.
1007150DAA	30	Rocker Assy Consists of:	6	
1007151DAA	31	→ Rocker	6	
1007152DAA	32	→ Rocker Bushing	6	
G617186M86	33	Nut	6	
1007104DAA	34	Spring	3	
G8968612	35	Circlip	2	
1007102DAA	36	Rocker Bracket (Middle)	2	
G89886M870	37	Stud	3	
G578286M850	38	Bolt	5	
1007105DAA	39	Stud	4	
1007101DAA	40	Rocker Bracket (Front)	1	
71000810	41	Plug	2	
1007161DAA	42	Rocker Shaft	1	
1007109DAA	43	Decompressing Screw	3	
G6172866	44	Nut	3	
1007111DAA	45	Decompressing Shaft	1	
G578386M820	46	Bolt	2	
1003015DAA	47	Injector Stopper	3	
G89888M865	48	Stud	6	
G578386M612	49	Bolt	4	
G93876	50	Washer	7	
1003211DAA	51	Decompressing Handle Stopper	1	
1003270DAA	52	Decompressing Lever	1	
G1235761424	53	O- Ring	1	
1003208DAA	54	Retracting Spring	1	
1003209DAA	55	Hanger	1	
G972856	56	Washer	3	
1003207DAA	57	Set Screw	1	
G1235763831	58	O-Seal Ring	1	

Cylinder Head and Cover

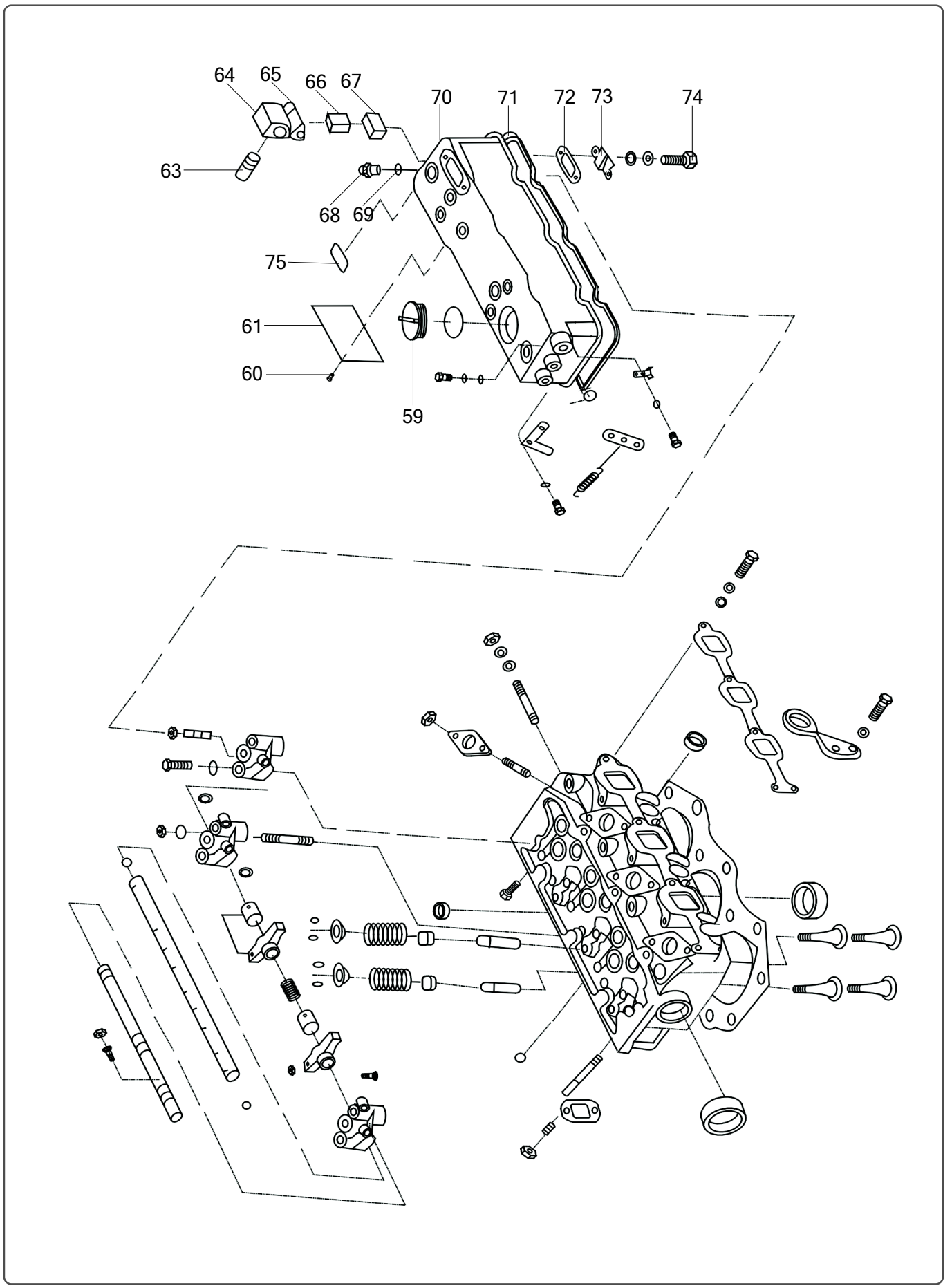

MUSA Part Number	Ref.	Description of Part	Unit Quantity	Remarks/ Service Bulletin No.
1003202DAA	59	Oil Filler Cap	1	
G8278625	60	Rivet	4	
1003273DAL01	61	Nameplate	1	
1003255DAA	63	Short Breathing Pipe	1	
1003251DAA	64	Breather Housing	1	
1003256DAA	65	Breather Seal	1	
1003260DAA	66	Frame	1	
1003254DAA	67	Gauze	1	
1003023DAA	68	Cylinder Head Nut	4	
G1235761624	69	O-Ring	4	
1003201DAA	70	Cylinder Head Cover	1	
1003205DAA	71	Seal	1	
1003253DAA	72	Perforated Hold Baffle	1	
1003252DAA	73	Baffle	1	
G6785M630	74	Screw	2	

Cylinder Block,Flywheel Housing and Liner

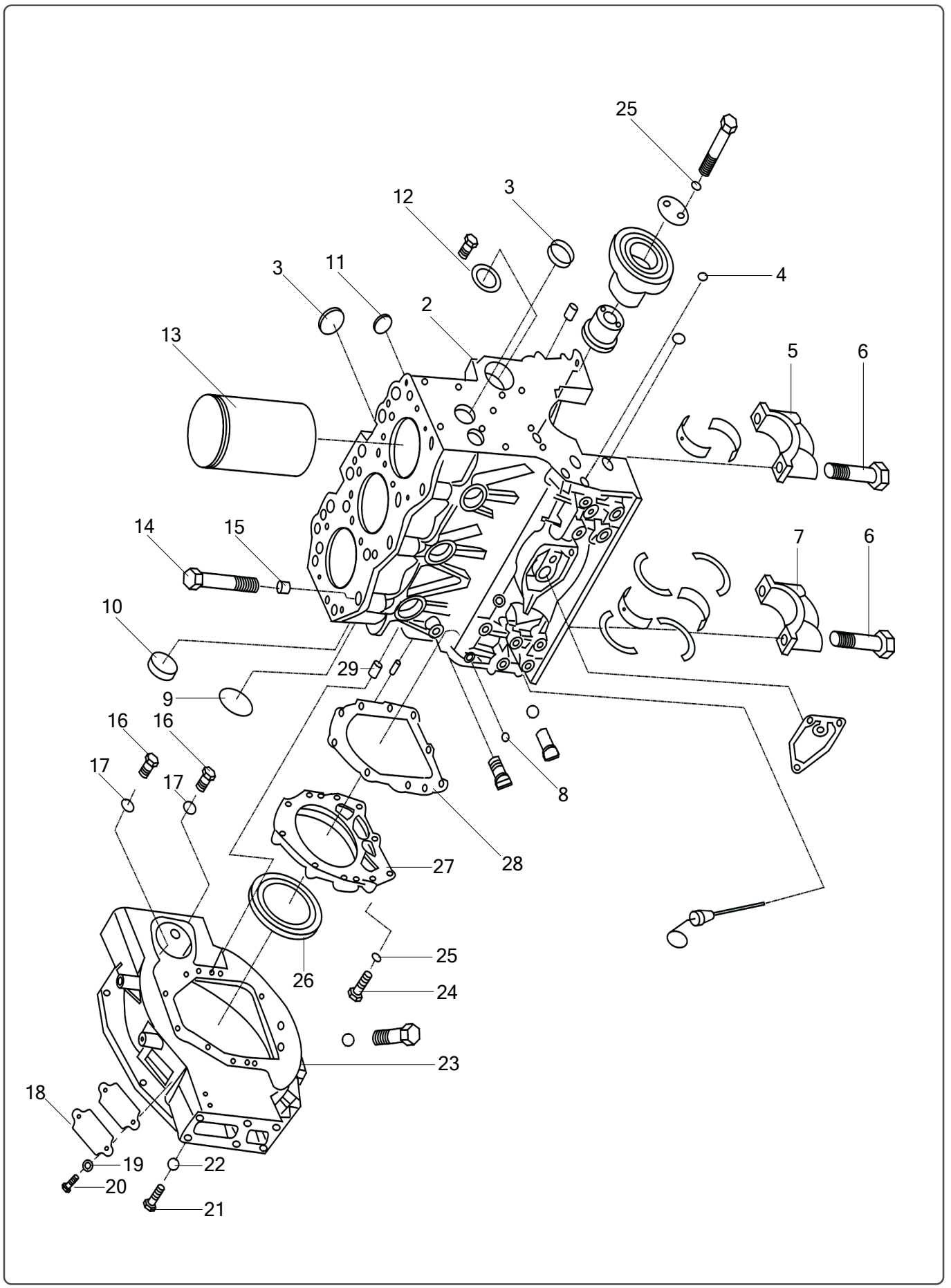

Cylinder Block,Flywheel Housing and Liner

MUSA Part Number	Ref.	Description of Part	Unit Quantity	Remarks/ Service Bulletin No.
1002100DAA	1	Cylinder Block Assy Consists of:	1	
1002101DAA	2	➔Cylinder Block	1	
1002115DAA	3	➔Plug	7	
1002111DAA	4	➔Plug	4	
1002103DAA	5	➔Main Bearing Cap	3	
1002108DAA	6	➔Main Bearing Cap Blot	8	
1002105DAA	7	➔Back Main Bearing Cap	1	
1002118DAA	8	➔Plug	3	
71000850	9	➔Plug	1	
1002116DAA	10	➔Plug	1	
1002114DAA	11	➔Plug	2	
1002106DAA	12	➔Bushing	1	
1002102DAA	13	➔Cylinder Liner	3	
1003014DAA	14	Cylinder Head Bolt	14	
1002024DAA	15	Cylinder-head Dowel Bushing	2	
G578386M1225	16	Bolt	2	
G938712	17	Washer	2	
1023012DAH	18	Cover Eyesight	1	
G93878	19	Washer	2	
G578386M816	20	Bolt	2	
G578386M1030	21	Bolt	11	
G938710	22	Washer	11	
1023011DAH01	23	Flywheel Housing	1	
G578386M830	24	Bolt	10	
G93878	25	Washer	10	
1002070DAA01	26	Crankshaft Seal	1	
1002022DAA	27	Crankshaft seal Cover	1	
1002023DAA	28	Gasket	1	
G11986A1016	29	Pin	1	

Cylinder Block,Flywheel Housing and Liner

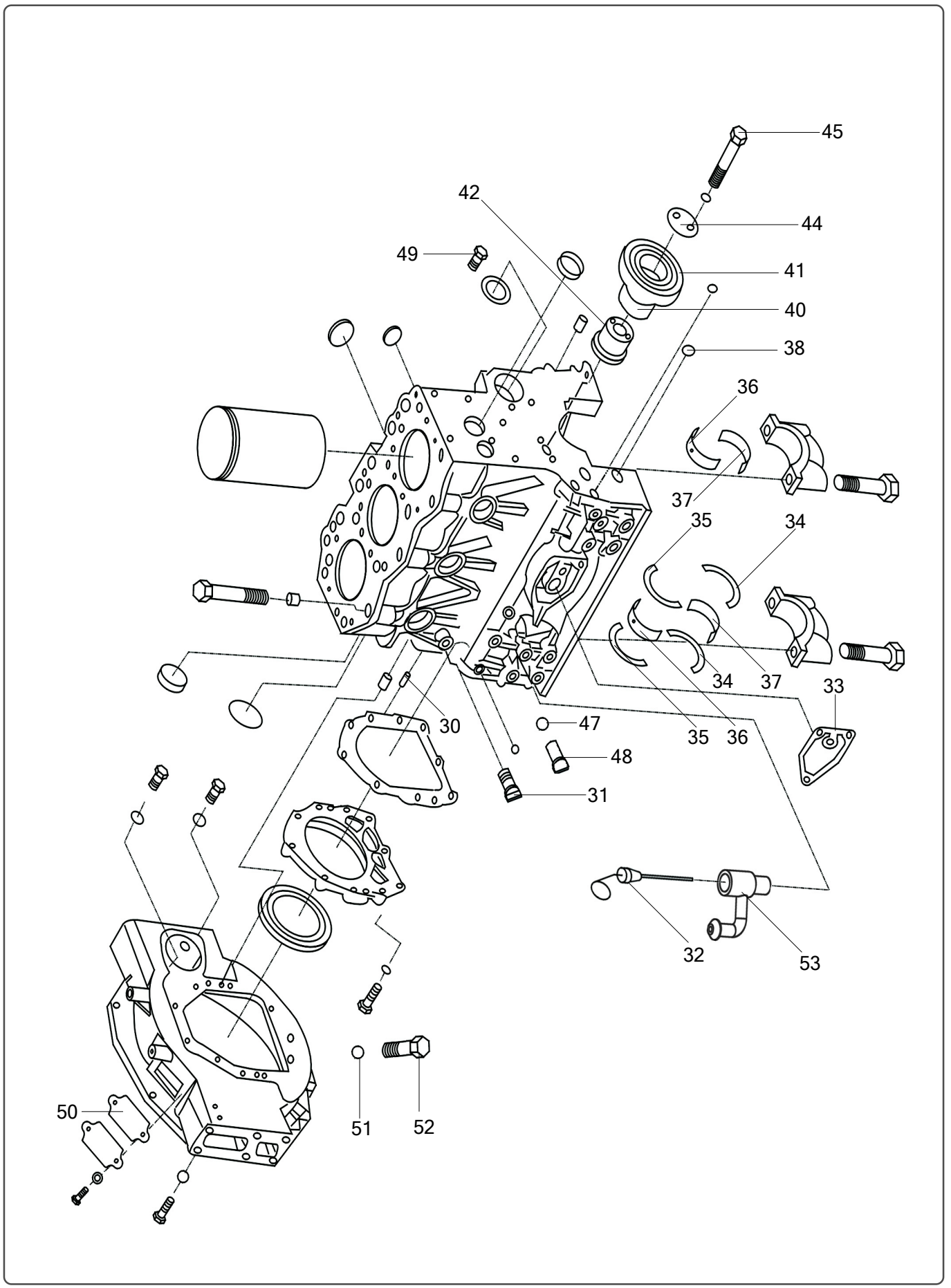

MUSA Part Number	Ref.	Description of Part	Unit Quantity	Remarks/ Service Bulletin No.
G11986A620	30	Pin	1	
1002080CAA	31	Drain valve	1	
1002050DAL	32	Dipstick	1	
1012011DAA	33	Gasket	1	
1002014DAA	34	Thrust bearing (Lower)	2	
1002013DAA	35	Thrust bearing (upper)	2	
1002015DAA	36	Main Bearing (upper)	4	
1002016DAA	37	Main Bearing (upper)	4	
G1235762024	38	O-Ring	2	
1002350DAA	39	Idling Gear Assy Consists of:	1	
1002352DAA	40	▶ Idling Gear Bush	1	
1002351DAA	41	▶ Idling Gear	1	
1002301DAA	42	Idling Gear shaft	1	
1002302DAA	44	Idling Gear Stopper	1	
G578386M850	45	Bolt	2	
1023015DAL	46	Plug	12	
710010145	47	Washer	1	
1002124DAA01	48	Connecter for oil sensor	1	
G7385M810	49	Screw	1	
1023014DAH	50	Gasket	1	
71001085	51	Washer	1	
1023013DAA	52	Drain Plug	1	
1002530DAS	53	Sleeve of Dipstick Assembly	1	

Front Cover and Plato

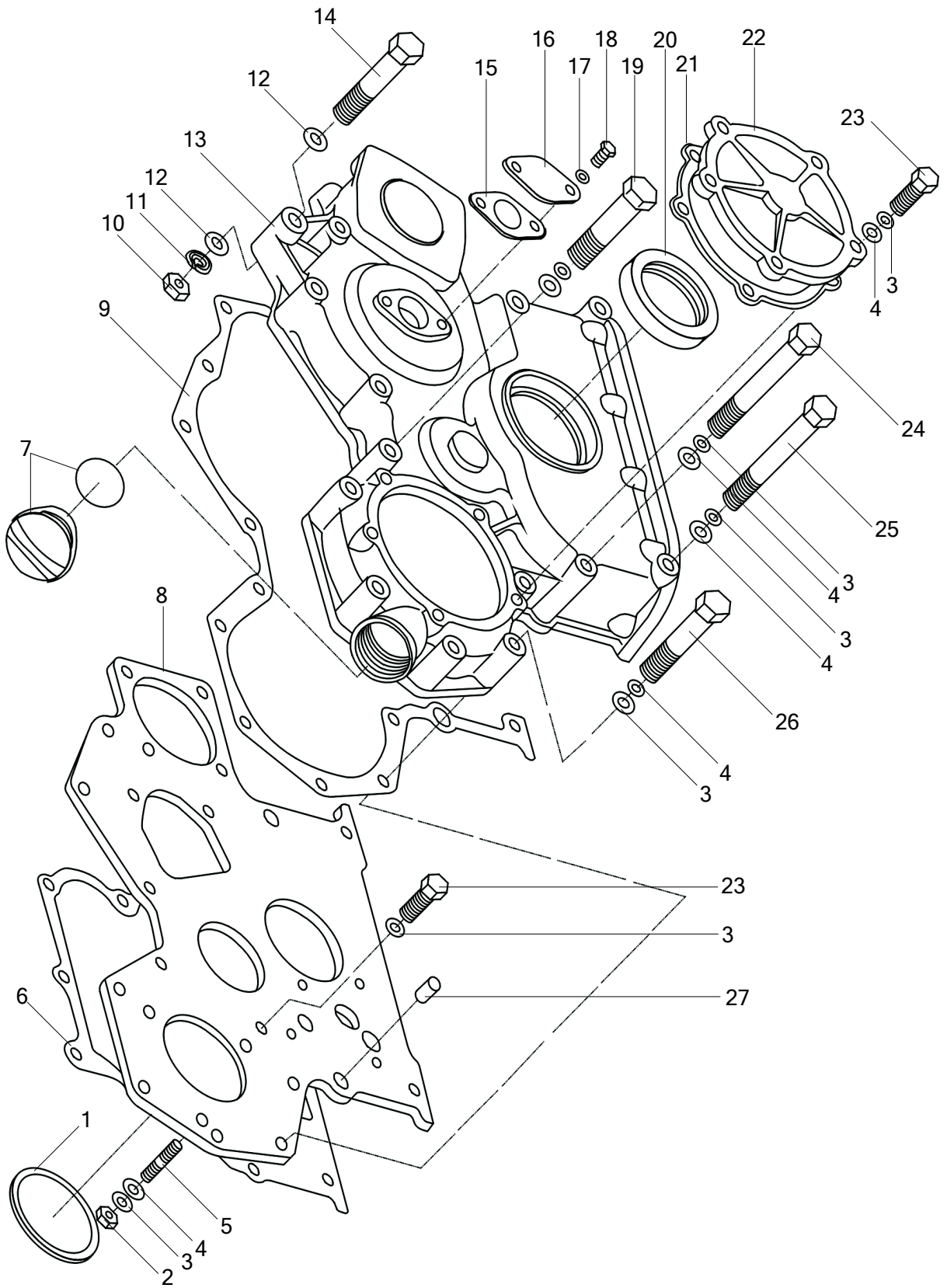

MUSA Part Number	Ref.	Description of Part	Unit Quantity	Remarks/ Service Bulletin No.
G1235767531	1	O-Seal Ring	1	
G617086M86	2	Nut	3	
G93878	3	Washer	24	
G927858	4	Washer	21.	
G89888AM830	5	Stud	3	
1002012DAA	6	Gasket	1	
1002460DAA01	7	Cap	1	
1002011DAA	8	Plate	1	
1002402DAA	9	Gasket	1	
G617086M10	10	Nut	1	
G938710	11	Washer	1	
G978510	12	Washer	2	
1002401DAA01	13	Gear House	1	
G578286M1090	14	Bolt	1	
1002407DAA	15	Gasket	1	
1002406DAA	16	Cover Plate	1	
G93876	17	Washer	2	
G578386M612	18	Bolt	2	
G578286M865	19	Bolt	2	
1002450DAA01	20	Oil Rubber Seal	1	
1002409DAA	21	Gasket	1	
1002408DAA	22	End Plate	1	
G578386M820	23	Bolt	8	
1002405DAA	24	Bolt - M8x87	2	
1002404DAA	25	Bolt - M8x92	2	
G578286M855	26	Bolt	7	
1002021DAA	27	Dowel Bushing	1	

Lubricating Oil Sump

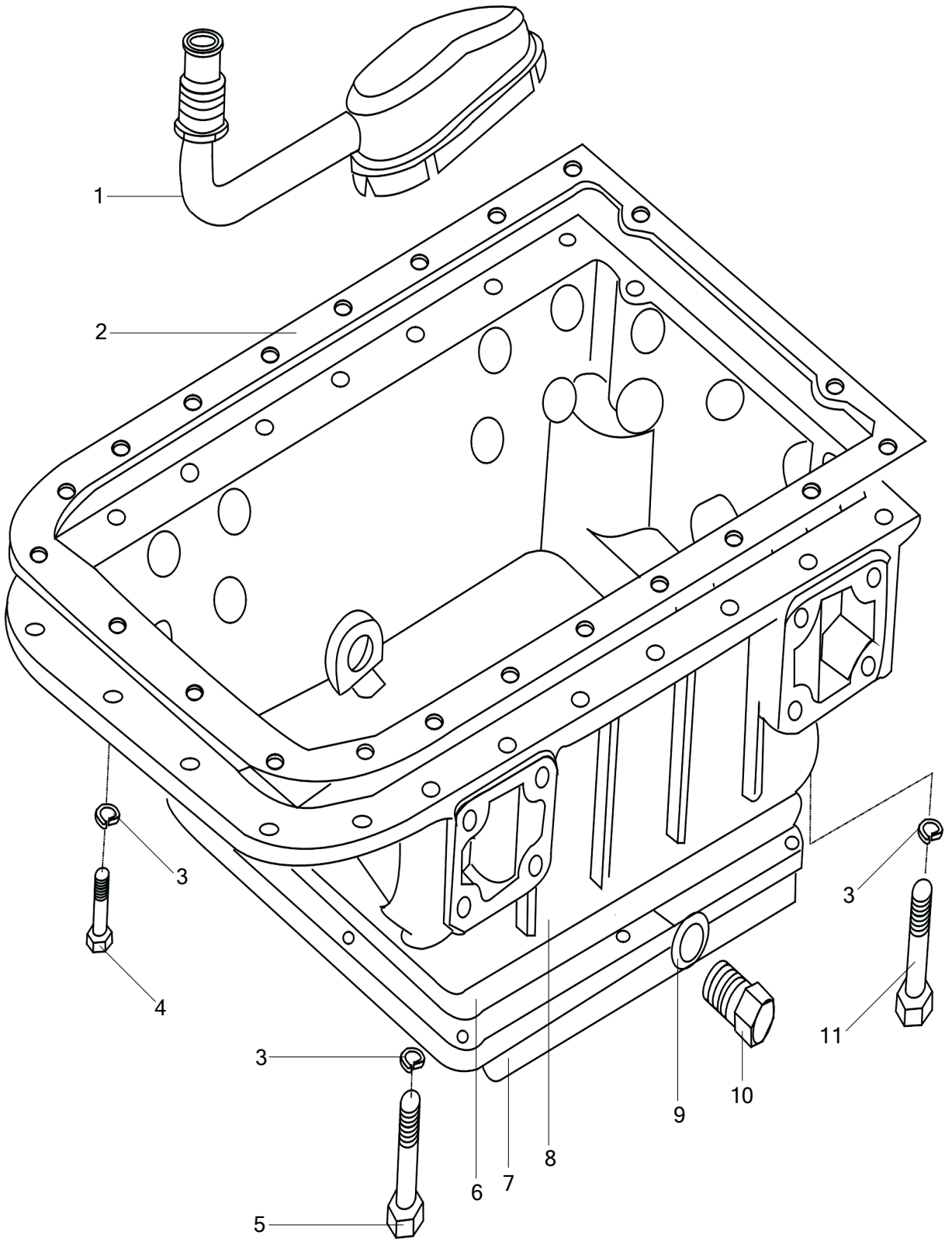

MUSA Part Number	Ref.	Description of Part	Unit Quantity	Remarks/ Service Bulletin No.
1009600DAA	1	Inlet Pipe	1	
1009011DAA	2	Gasket	1	
G93878	3	Washer	39	
G578386M825	4	Bolt	29	
G578286M890	5	Bolt M	8	
1009052DAA	6	Gasket	1	
1009053DAA	7	Oil Pan (Lower)	1	
1009051DAA	8	Oil Pan(upper)	1	
G1235762024	9	O-Ring	2	
1009012DAA	10	Draining Plug	2	
G578286875	11	Bolt	2	

Hydraulic pump Bracket and Gear

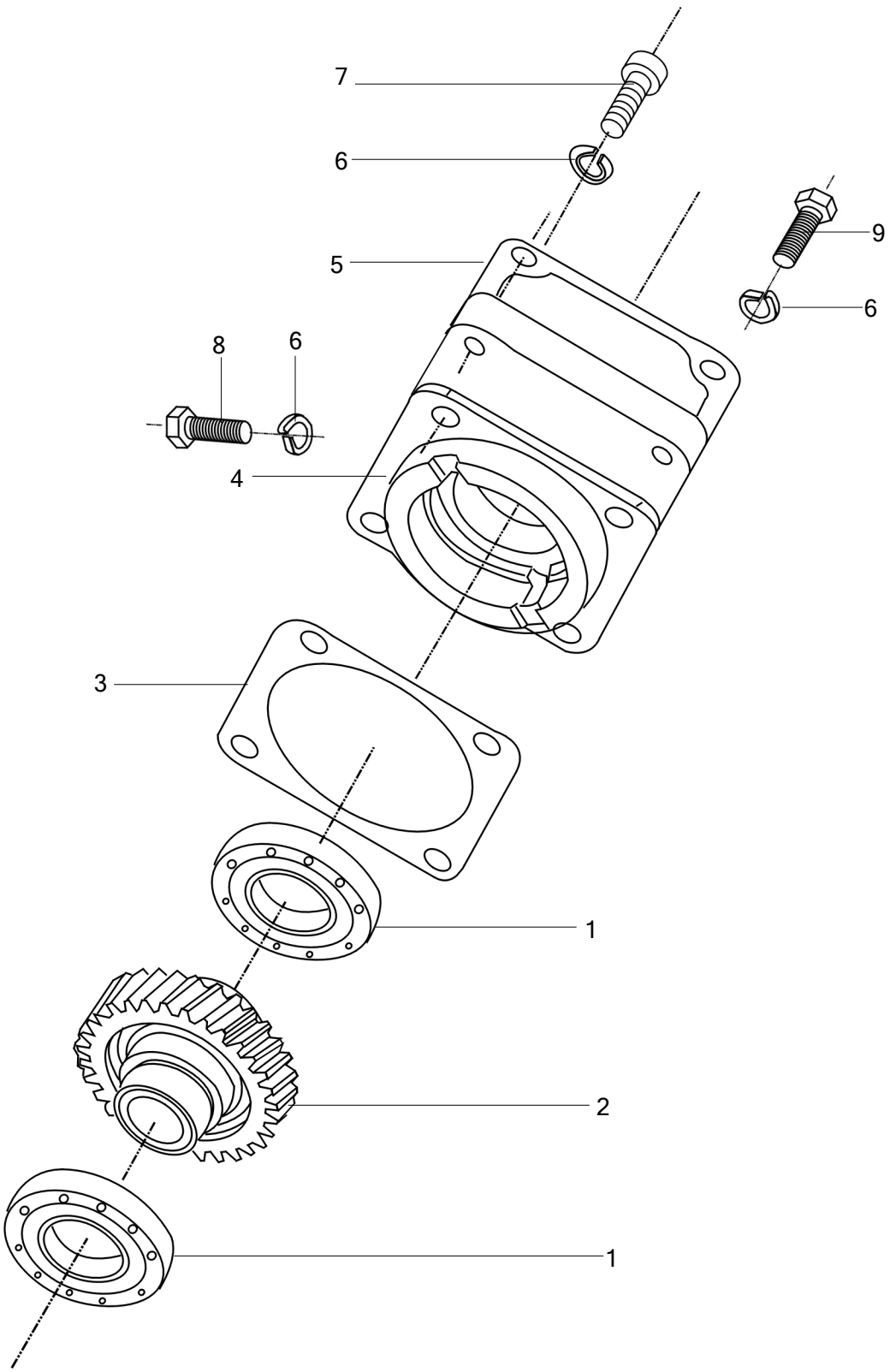

Hydraulic pump Bracket and Gear

MUSA Part Number	Ref.	Description of Part	Unit Quantity	Remarks/ Service Bulletin No.
G27689106	1	Bearing	2	
1026011DAA	2	Hydraulic pump Gear	1	
1026013DAA	3	Gasket	2	
1026012DAA	4	Bearing seat	1	
1026014DAA	5	Gasket	1	
G93878	6	Washer	6	
G7085M825	7	Screw	2	
G578286M845	8	Bolt	2	
G578286M835	9	Bolt	2	

Camshaft, Tappet and Push Rod

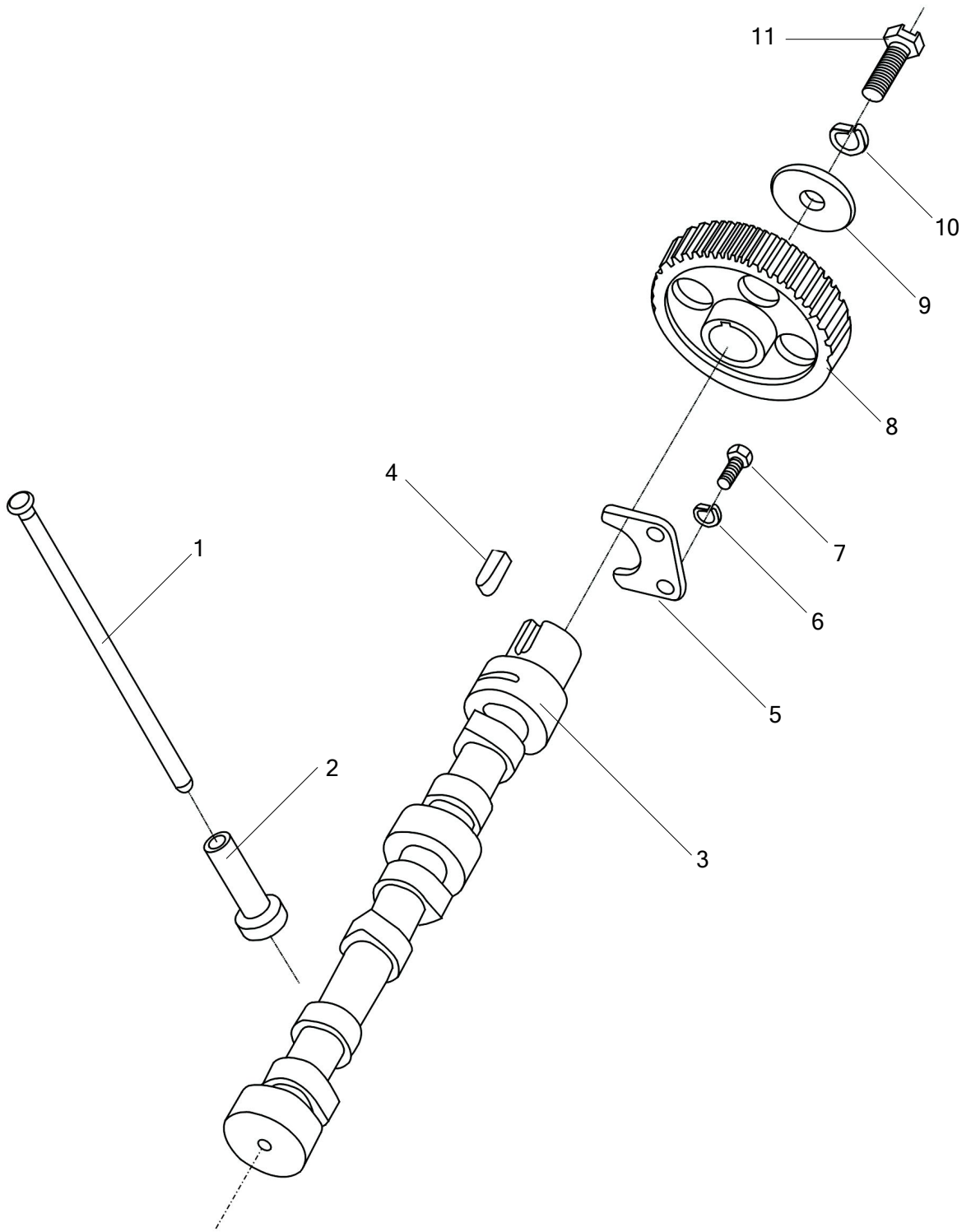

Camshaft,Tappet and Push Rod

MUSA Part Number	Ref.	Description of Part	Unit Quantity	Remarks/ Service Bulletin No.
1007050DAA	1	Push Rod	6	
1007011DAA	2	Tappet	6	
1006011DAA02	3	Camshaft	1	
G109679C825	4	Key	1	
1006013DAA	5	Camshaft Stopper	1	
G93878	6	Washer	2	
G578386M816	7	Bolt	2	
1006012DAA	8	Camshaft Gear	1	
1006014DAA	9	Camshaft Gear Washer	1	
G938712	10	Washer	1	
1006015DAA	11	Camshaft Gear Screw	1	

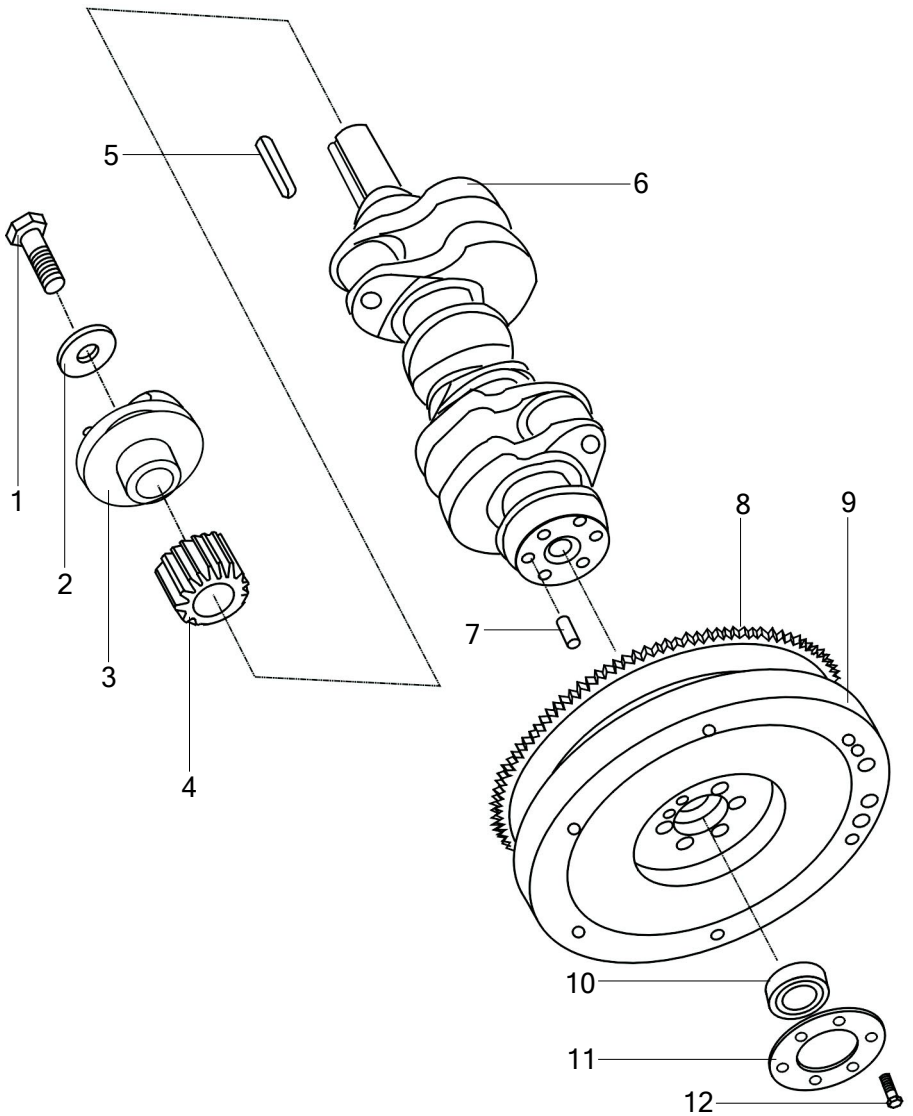
5
6
1
2
3
4
7
8
9
10
11
12

MUSA Part Number	Ref.	Description of Part	Unit Quantity	Remarks/ Service Bulletin No.
1005017DAA	1	Crankshaft Pulley Bolt	1	
1005018DAA	2	Crankshaft Pulley Washer	1	
1005013DAA	3	Crankshaft Pulley	1	
1005012DAA	4	Crankshaft Timing Gear	1	
G109679C1065	5	Key	3	
1005011DAA	6	Crankshaft	1	
G11986A1025	7	Pin	1	
1005062DAA	8	Ring Gear	1	
1005061DAH	9	Flywheel	1	
G2788960203	10	Ball Bearing	1	
1005015DAA	11	Retainer	1	
1005014DAA	12	Flywheel Bolt	1	

Piston Connecting Rod and Cylinder Liner

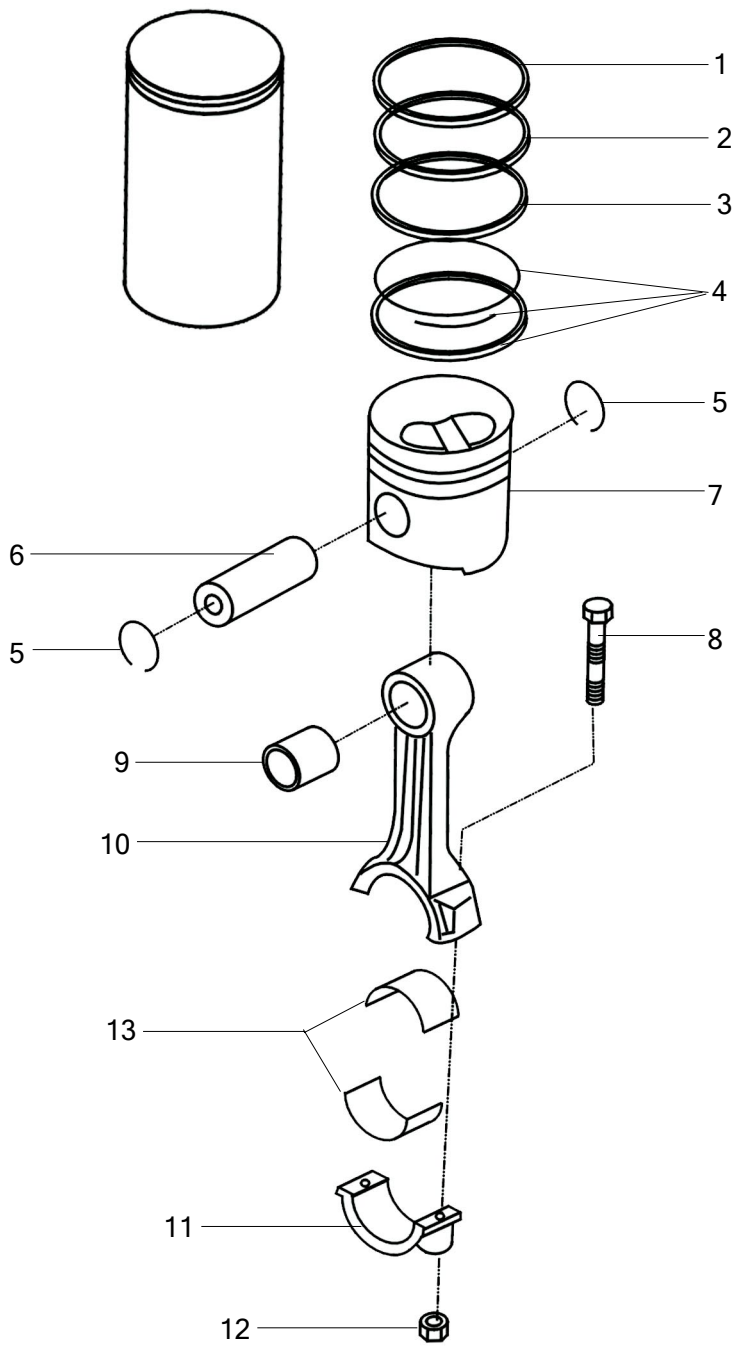

Piston Connecting Rod and Cylinder Liner

MUSA Part Number	Ref.	Description of Part	Unit Quantity	Remarks/ Service Bulletin No.
1004014CAA	1	Top Ring	6	
1004015CAA	2	Second Ring	3	
1004016CAA	3	Third Ring	3	
1004050CAA	4	Ring, Oil	3	
G89318728	5	Circlip	6	
1004011CAA	6	Piston Pin	3	
1004061DAB	7	Piston	3	
1004100DAA	*	Connecting Rod Assy Consists of:	3	
1004104DAA	8	→ Connecting Rod Bolt	6	
1004102DAA	9	→ Small End Bushing	3	
1004101DAA	10	→ Connecting Rod	3	
1004103DAA	11	→ Connecting Rod Cap	3	
1004105DAA	12	→ Connecting Rod Nut	6	
1004018DAA	13	→ Connection Rod Bearing	6	

Lubricating Oil Pump

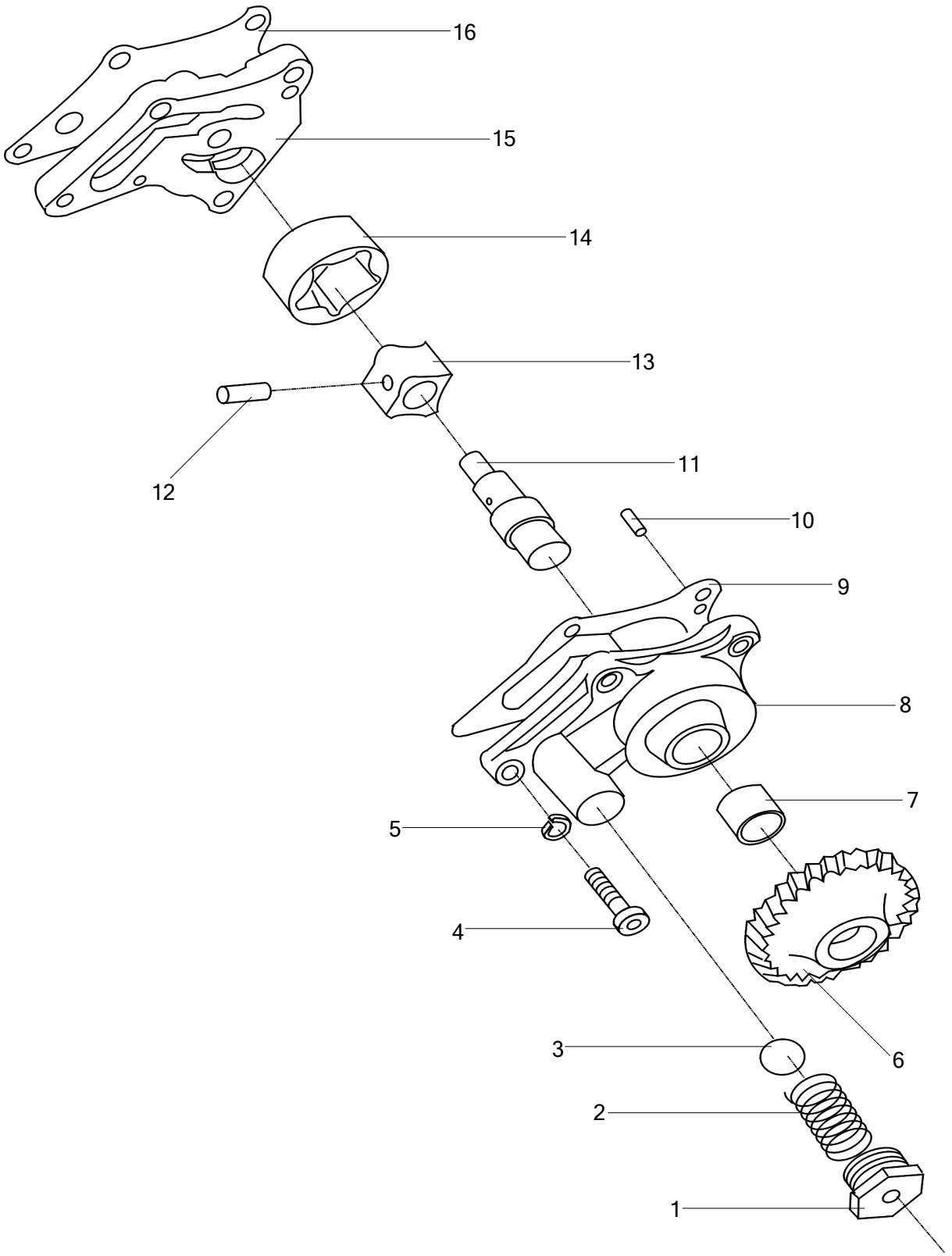

MUSA Part Number	Ref.	Description of Part	Unit Quantity	Remarks/ Service Bulletin No.
1011011DAA		Oil Pump Assy	1	
1011107DAA	1	Relief valve	1	
1011106DAA	2	Spring	1	
G3088410	3	Ball	1	
1011111DAA	4	Screw	4	
G93876	5	Washer	4	
1011104DAA	6	Oil Pump Gear	1	
1011162DAA	7	Bush	1	
1011161DAA	8	Oil Pump Body	1	
1011109DAA	9	Gasket	1~3	
G11986A412	10	Pin	2	
1011151DAA	11	Oil Pump Shaft	1	
G11986A520	12	Pin	1	
1011152DAA	13	Inner Rotor	1	
1011108DAA	14	Outer Rotor	1	
1011102DAA	15	Oil Pump Cover	1	
1011011DAA	16	Gasket	1	

Lubricating Oil Filter

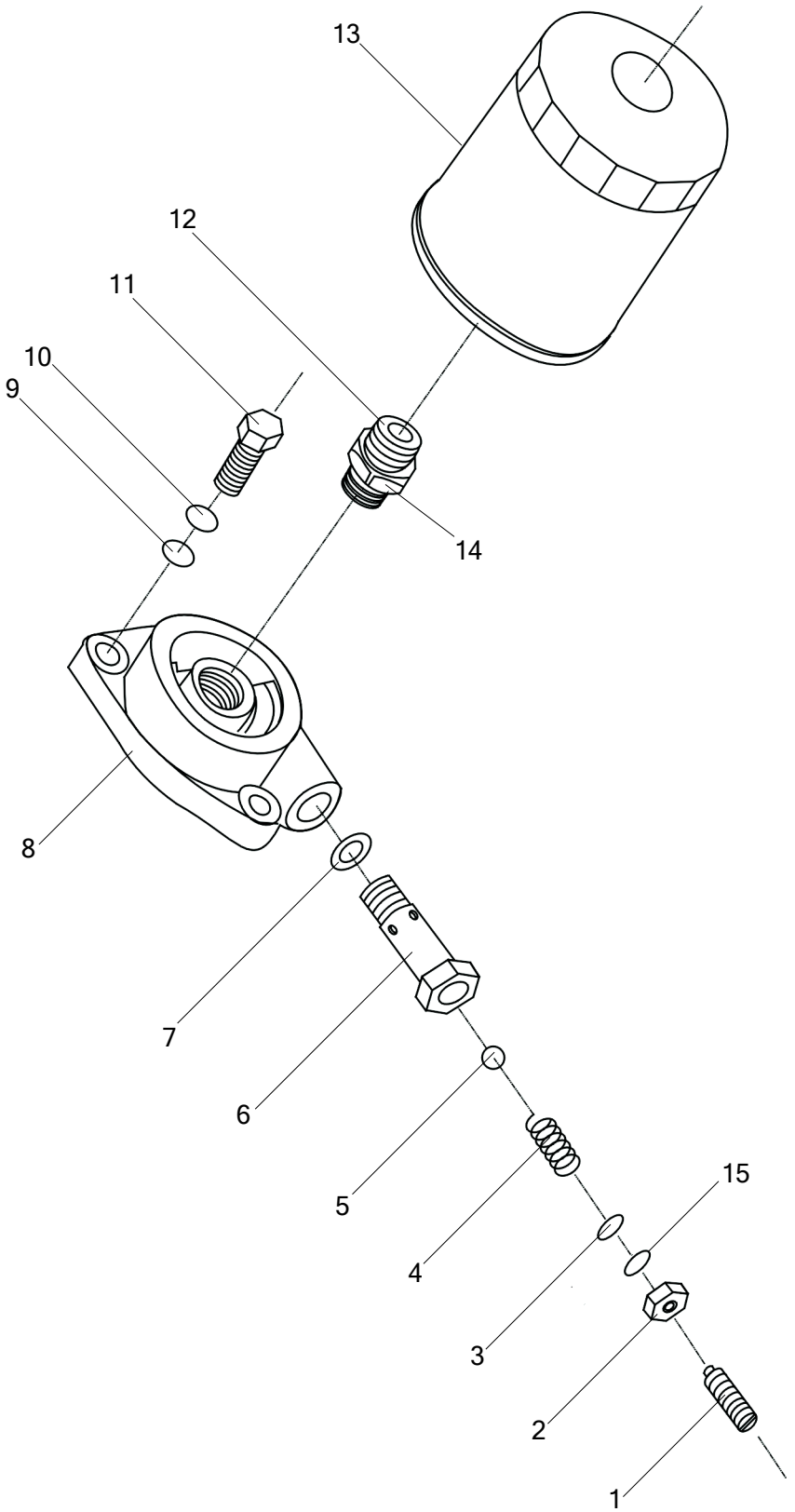

MUSA Part Number	Ref.	Description of Part	Unit Quantity	Remarks/ Service Bulletin No.
1012171DAB	1	Bolt	1	
G617386M1415	2	Nut	1	
1012109CAA	3	O-Rring - 12x1.6	1	
1012173DAB	4	Spring	1	
G3088410	5	Steel ball	1	
1012172DAB	6	Relief Valve Seat	1	
1012175DAA	7	O-Ring	1	
1012151DAB	8	Oil filter block	1	
G93878	9	Washer	3	
G93858	10	Washer	3	
G578286M830	11	Bolt	3	
1012152DAB	12	Union	1	
1012160DAB	13	Filter elements	1	
G617386M2015	14	Nut	1	
1012174DAA	15	Washer	1	

Fuel Injection Pump,Injector & Fuel System

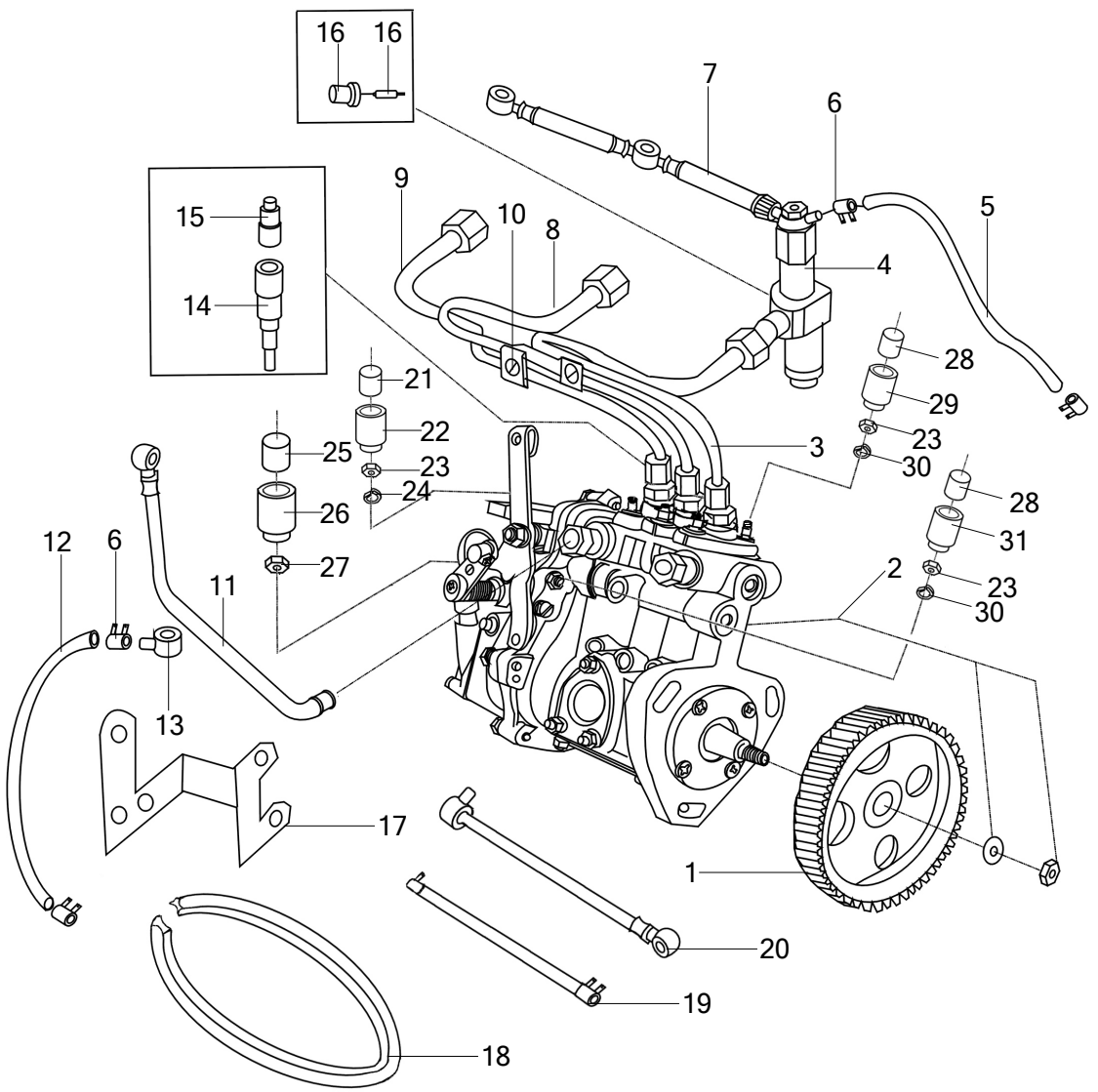

MUSA Part Number	Ref.	Description of Part	Unit Quantity	Remarks/ Service Bulletin No.
1111011DAA	1	Injection Timing Gear	1	
1111100DAS	2	Model BQ Injection Pump	1	
1129200DAA	3	Injection Pipe (Cylinder 1)	1	
1112001CAH	4	Injector Assy	3	
1104094DAG	5	Fuel pipe	1	
Q673B115	6	Clip Φ11.5	6	
1104090DAG	7	Fuel Overflow Pipe	1	
1129300DAA	8	Injection Pipe (Cylinder 2)	1	
1129400DAA	9	Injection Pipe (Cylinder 3)	1	
1129100CAH	10	Pipe Clip	2	
1104070DAH01	11	Fuel Pipe Assy	1	
1104052DAH02	12	Fuel pipe	1	
J6015	13	Pipe Union	1	
‡	14	Plunger Element	3	
‡	15	Delivery Valve Element	3	
1112050CAH	16	Nozzle Element	3	
‡	17	Bracket	1	
Q674073007300	18	Plastic strap	1	
1104050DAH02	19	Transport Pipe Assy	1	
1104060DAH01	20	Transport Pipe	1	
1111132DAL	21	Seal	1	
1111131DAL	22	Seal Cover-I	1	
G617000M6	23	Nut	9	
G859876	24	Spring washer	1	
1111122DAL	25	Seal	1	
1111121DAL	26	Seal cover	1	
1111123DAL	27	Nut	1	
1111111DAL	28	Seal for stud	7	
1111112DAL	29	Seal cover for stud	1	
G93876	30	Spring washer	7	
1111141DAL	31	Seal cover for stud-II	1	

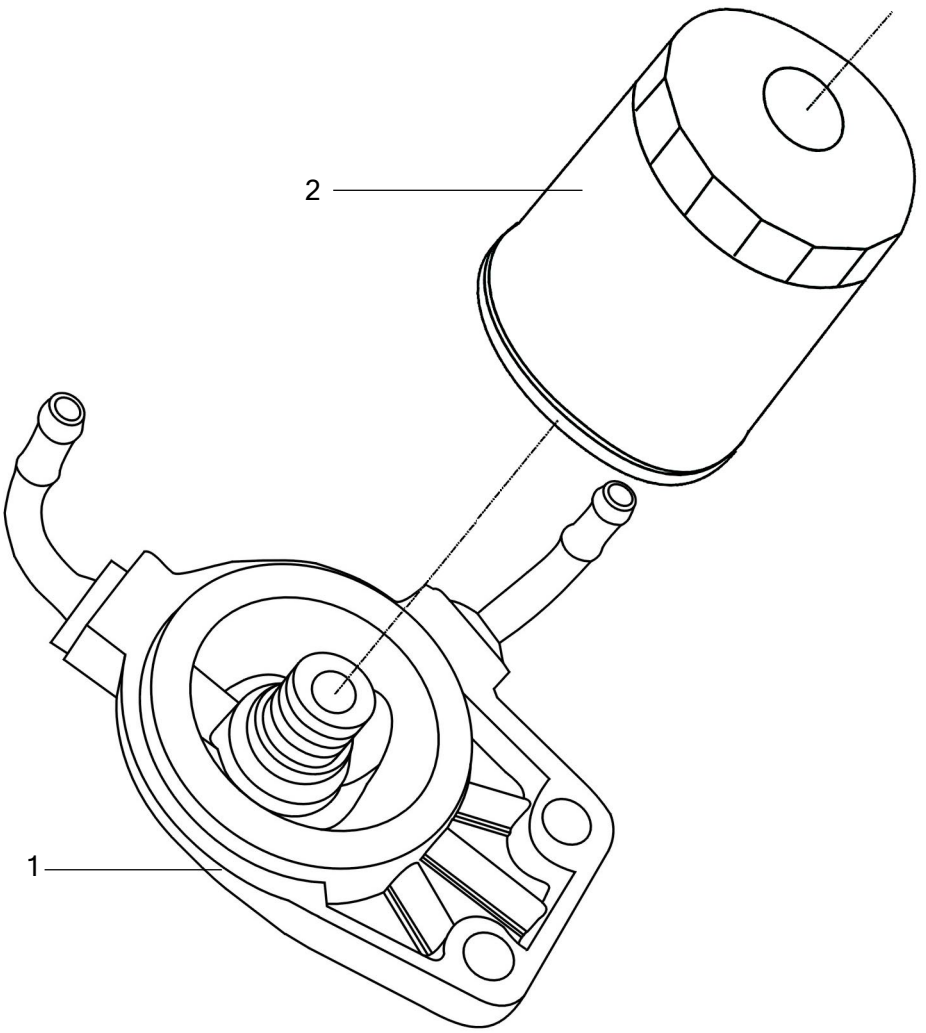
2
1

MUSA Part Number	Ref.	Description of Part	Unit Quantity	Remarks/ Service Bulletin No.
1117100DAH	*	Filter Consisting of:	1	
1117050DAH	1	↳ Fuel Filter Bracket	1	
1117150DAH	2	↳ Fuel Filter element	1	

MAHINDRA
TRACTORS

Throttle Linkages

THROTTLE LINKAGES

Throttle Controls & Linkages

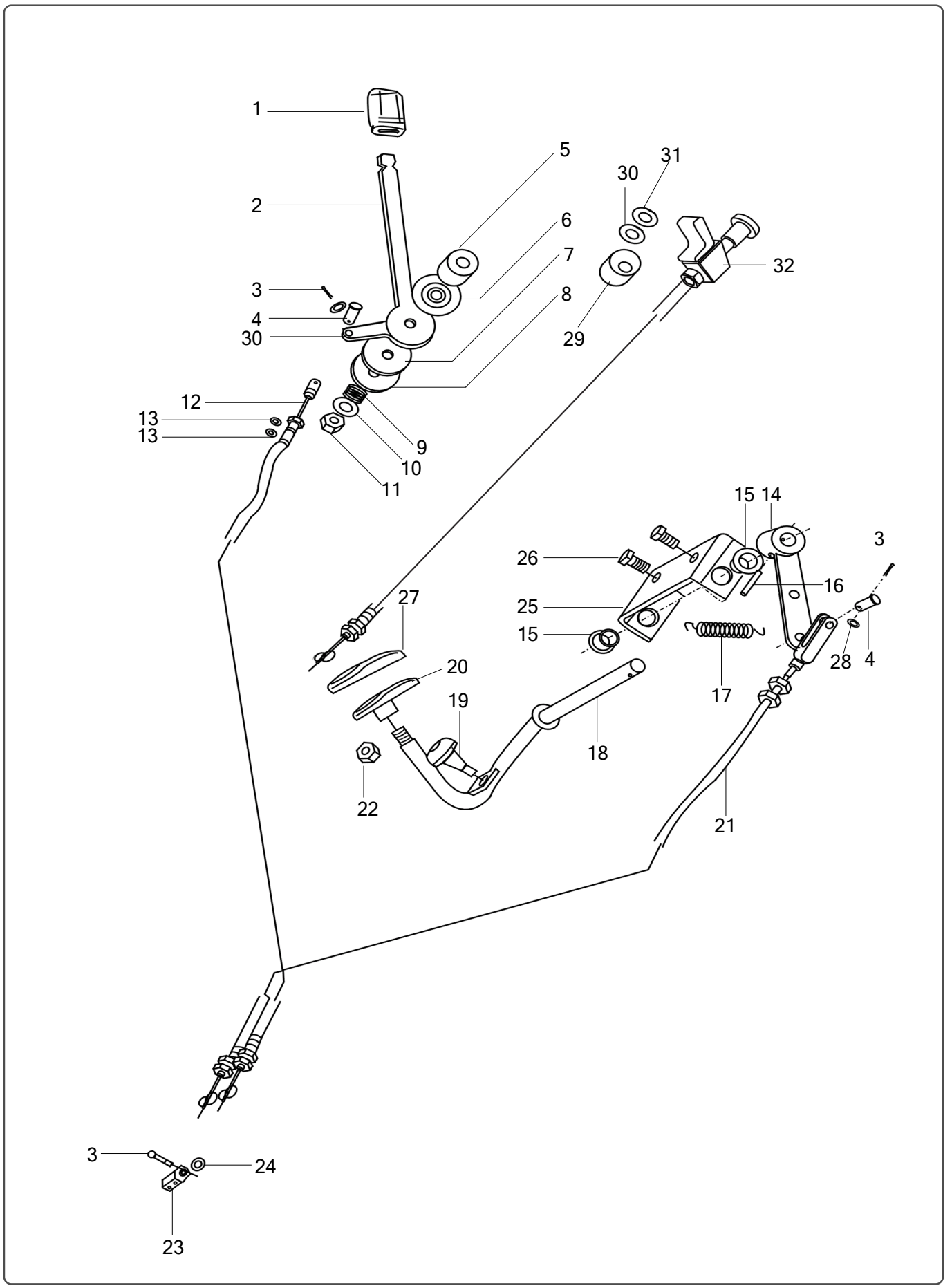

MUSA Part Number	Ref.	Description of Part	Unit Quantity	Remarks/ Service Bulletin No.
9200323BBA	1	Handle	1	
9201322BBA	2	Lever	2	
G9186220	3	Pin	3	
G882518	4	Pin	2	
9200326BBA	5	Washer	1	
9200324BBA	6	Washer	1	
9200321BBA	7	Disc	1	
G52878512	8	Washer	1	
9200325BBA	9	Spring	1	
G978512	10	Washer	1	
G618586M12	11	Nut	1	
9200031BBA	12	Cable	1	
G97858	13	Washer	2	
9200024BBA	14	Arm	1	
9200202BBA	15	Bush	2	
G87986425	16	Pin	2	
9200103BBB01	17	Spring	1	
9200022BBA01	18	Bracket	1	
9200201BBA	19	Bush	1	
9200023BBA01	20	Pedal	1	
9200021BBA	21	Cable	1	
G4186M12	22	Nut	1	
9200101BBS	23	Shaft	1	
G848856A	24	Washer	1	
9472107BBA	25	Foot throttle Support	1	
G578386M816	26	Bolt	2	
9200101BBB	27	Pedal shield	1	
G978512	28	Bolt	2	
9200115BBS	29	Eccentricity wheel	1	
G938710	30	Washer	1	
G617000M10	31	Nut	1	
9200040BBS02	32	Flameout cable	1	

MAHINDRA
TRACTORS

Clutch

CLUTCH

Clutch Cover and Pressure Plate

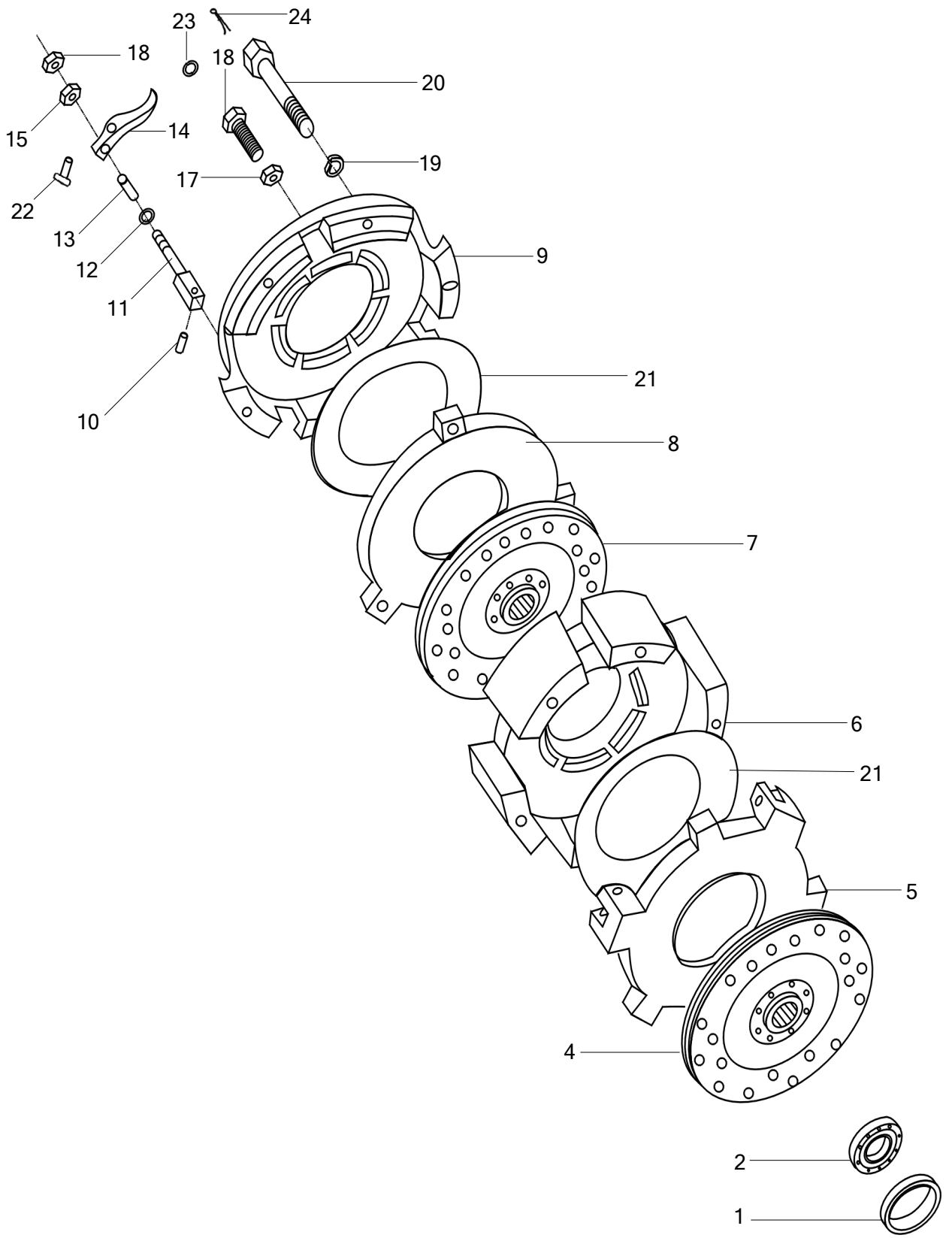

Clutch Cover and Pressure Plate

MUSA Part Number	Ref.	Description of Part	Unit Quantity	Remarks/ Service Bulletin No.
9210106BAA	1	Spacer	1	
G2788960203	2	Bearing	1	
9210020BBS	3	Cluch Semi Assy Consists of:	1	
9210030BBS	4	→Plate	1	
9210202BBD	5	→Plate	1	
9210203BBD	6	→Seat	1	
9210022BBS	7	→Plate	1	
9210204BBD	8	→Plate	1	
9210205BBD	9	→Cover	1	
G11986D1045	10	→Pin	3	
9210209BBD	11	→Rod	3	
G978510	12	→Washer	3	
9210207BBD	13	→Spring	3	
9210021BBD	14	→Lever	3	
9210206BBD	15	→Nut	3	
G617086M10	16	→Nut	3	
G617086M8	17	→Nut	3	
9210208BBD	18	→Screw	3	
G938710	19	→Washer	6	
G578286M10110	20	→Bolt	6	
9210201BBD	21	→Spring	2	
G88286B104510	22	Pin	3	
G8488510	23	Washer	3	
G9186320	24	Pin	3	

Clutch Pedal & Connections

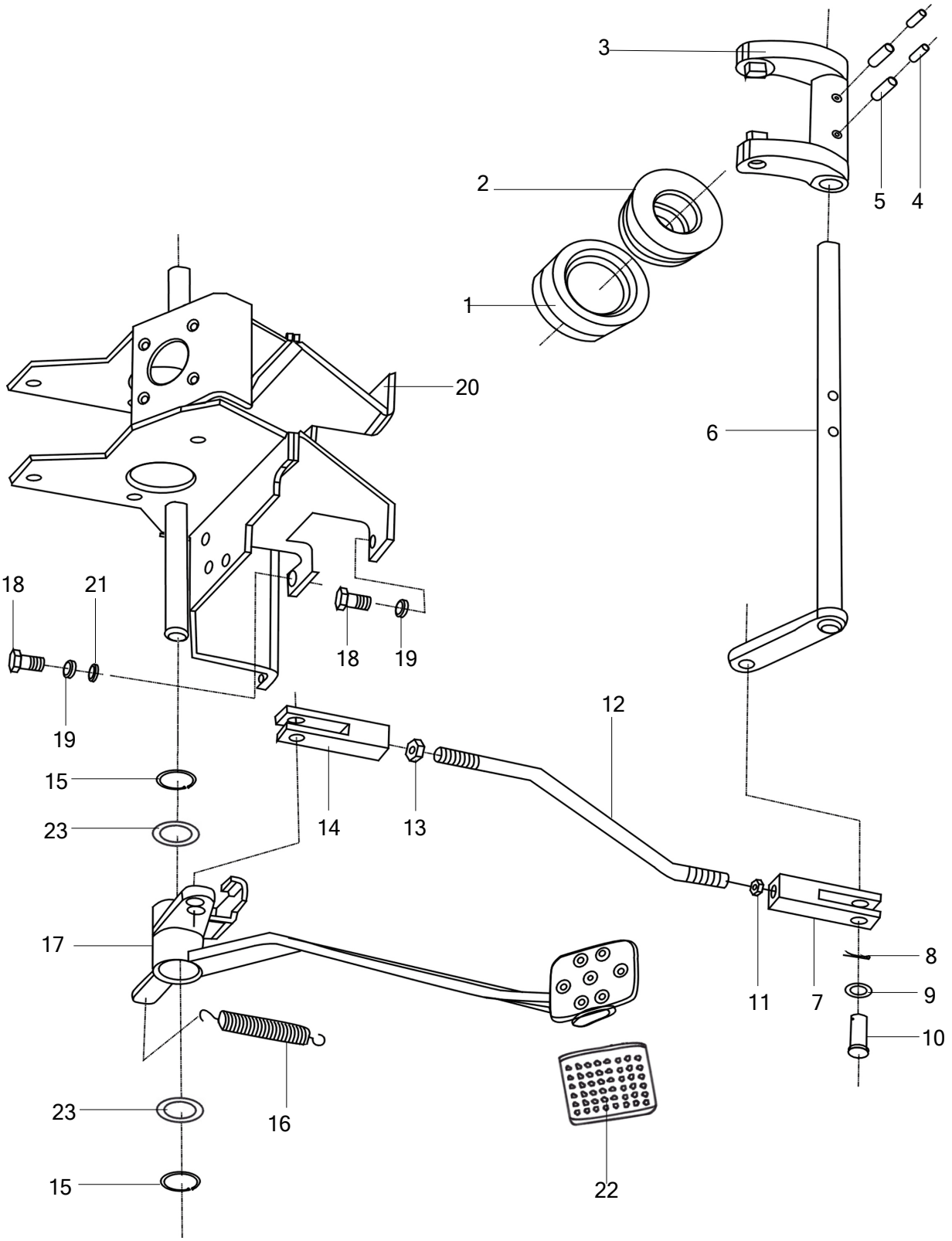

Clutch Pedal & Connections

MUSA Part Number	Ref.	Description of Part	Unit Quantity	Remarks/ Service Bulletin No.
9210090BBB	1	Bearing	1	
9210109BBB	2	Seat	1	
9210701BBB	3	Fork	1	
G87986535	4	Pin	2	
G87986835	5	Pin	2	
9210050BBB01	6	Shaft	1	
9210107BBA01	7	Clevis (R)	1	
G91863224	8	Pin	2	
G978514	9	Washer	2	
G88286B1435	10	Pin	2	
G617086M14	11	Nut	1	
9210108BBA	12	Rod	1	
G617086M14L	13	Nut (L)	1	
9210106BBA01	14	Clevis (L)	1	
G8948630	15	Circlip	2	
9210107AAA	16	Spring	1	
9210060BBS01	17	Arm	1	
G578386M1020	18	Screw	4	
G938710	19	Washer	4	
9210040BBS03C	20	Bracket	1	
G978510	21	Washer	2	
9210110BBB	22	Jacket pedal	1	
9430125BBB	23	Washer	2	

MAHINDRA
TRACTORS

Front Axle

Front Axle

Front Axle and Wheel Hub

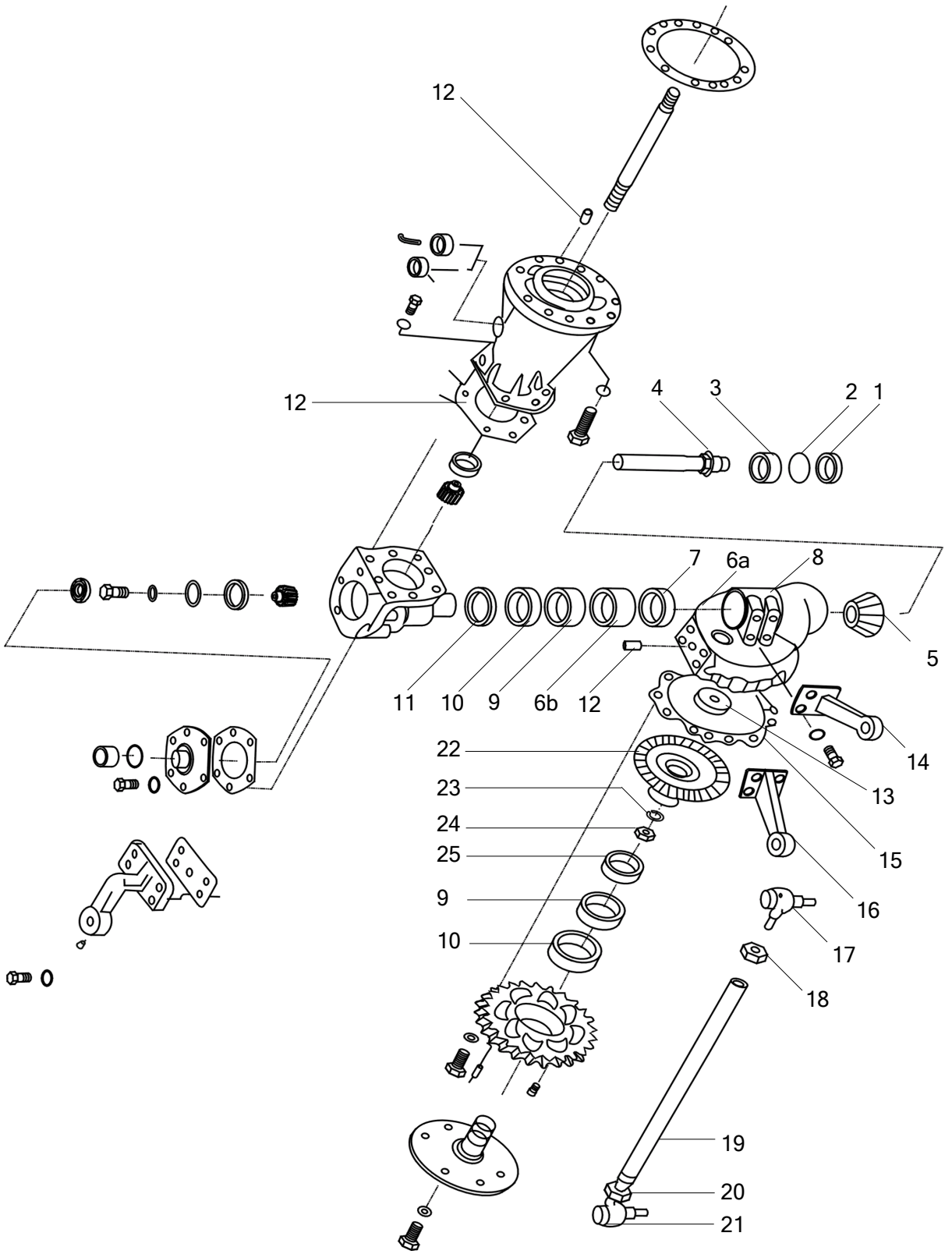

MUSA Part Number	Ref.	Description of Part	Unit Quantity	Remarks/ Service Bulletin No.
9311090ABA	1	Cover	2	
G8938662	2	Ring	2	
G27689305	3	Bearing	2	
9311106ABA	4	Shaft	2	
9311111ABA	5	Gear	2	
9311040ABA	6	House and sleeve consists of:	1	
9311401ABA	6a	▸House (L)	1	
9311402ABA	6b	▸ Sleeve	1	
G301848106	7	Bearing	2	
9311050BBD	8	House and sleeve consists of:	1	
9311501BBD	8a	▸ House (R)	1	
9311402ABA	8b	▸Sleeve	1	
G987788B507212F	9	Seal	4	
G987788FB50727F	10	Seal	4	
9311114ABA	11	Packing	2	
G11986A1624	12	Pin	2	
G27689206	13	Bearing	2	
9311118ABA	14	Arm (L)	1	
9311115ABA	15	Gasket	A.R	
9311119ABA	16	Arm (R)	1	
9310082AAA	17	Joint (R)	1	
G617386M615	18	Nut	1	
9311080BBD	19	Rod	1	
G617386M1615L	20	Nut	1	
9310081AAA	21	Joint (L)	1	
9311105ABA	22	Gear	2	
G8588839	23	Circlip	2	
G81288M3915	24	Nut	2	
G27689208	25	Bearing	2	

Front Axle and Wheel Hub

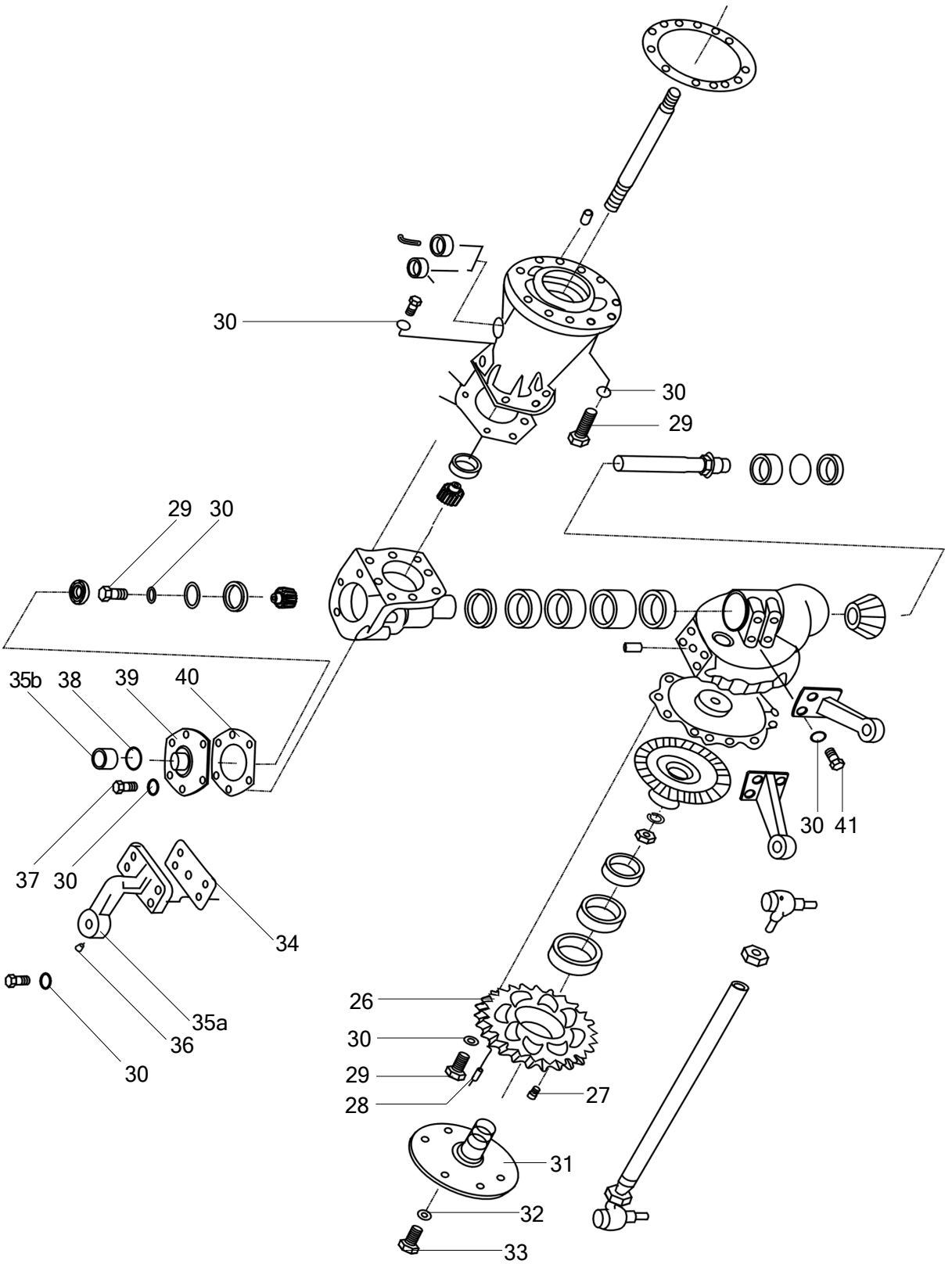

MUSA Part Number	Ref.	Description of Part	Unit Quantity	Remarks/ Service Bulletin No.
9311104ABA	26	Cover	2	
ZBT32001Z12	27	Plug	2	
G11986D820	28	Pin	4	
G578386M1028109	29	Bolt	42	
G938710	30	Washer	84	
9311135BBD	31	Shaft	2	
G938714	32	Washer	10	
G578386M1430	33	Screw	10	
9311131ABA	34	Gasket	A.R	
9311070ABA	35	Arm Assy Consists of:	2	
9311601ABA	35a	→ Arm	2	
9311701ABA	35b	→ Bush	2	
G115279M101	36	Nipple	2	
G578386M1025	37	Screw	12	
G1235764135	38	Seal	2	
9311110ABA	39	Cover	2	
9311116ABA	40	Gasket	2	

Front Axle and Wheel Hub

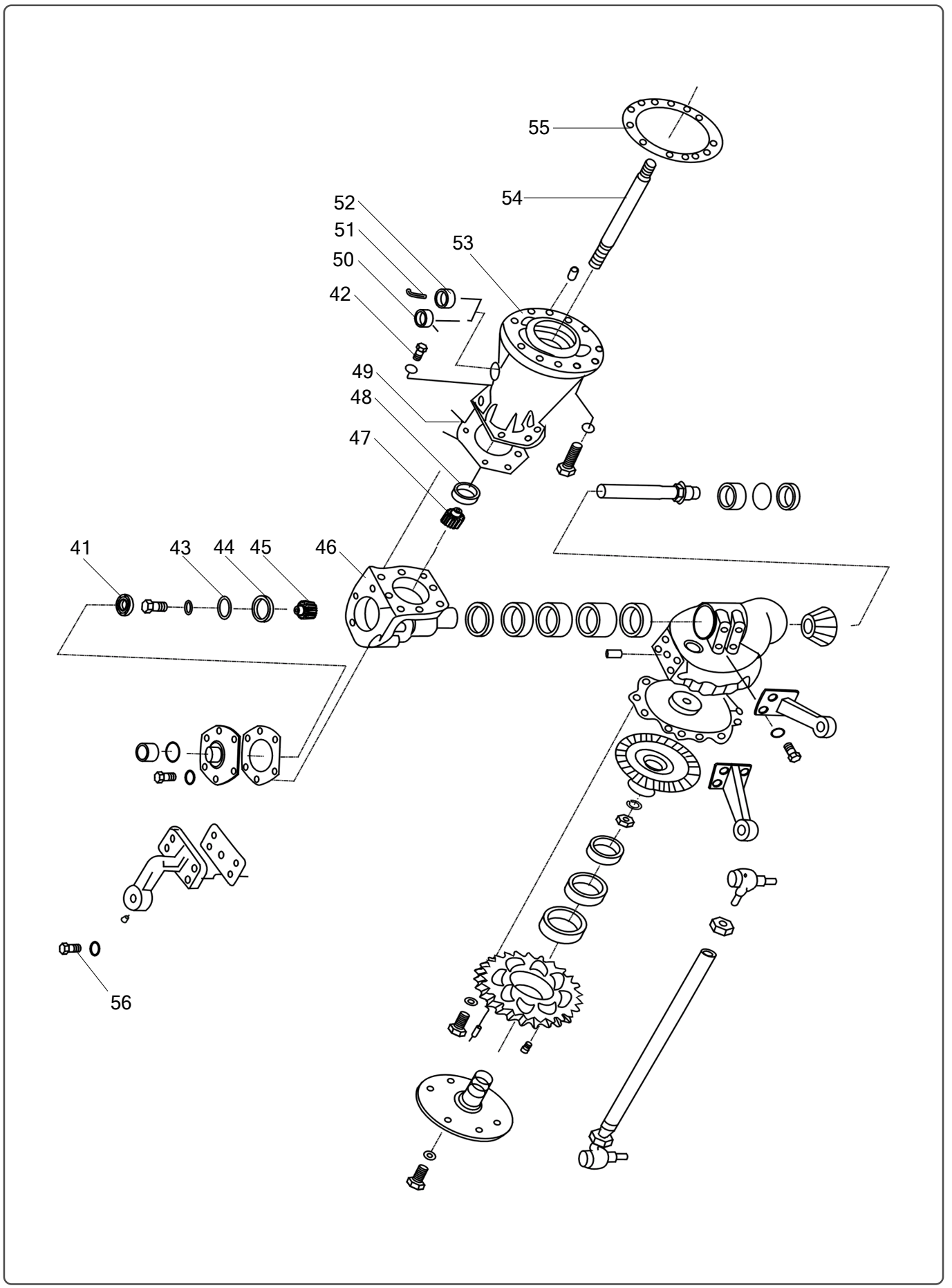

MUSA Part Number	Ref.	Description of Part	Unit Quantity	Remarks/ Service Bulletin No.
G27689110	41	Bearing	2	
G578386M1030	42	Screw	12	
9311117ABA	43	Ring	2	
9311132ABA	44	Gasket	A.R	
9311107ABA	45	Gear	2	
9311103ABA	46	Tube	2	
9311108ABA	47	Gear	2	
G27689207	48	Bearing	2	
9311123ABA	49	Washer	2	
9312050ABA	50	Dipstick	1	
9311120ABA	51	Tube	1	
9311130ABA	52	Plug	1	
9311102BBD	53	Housing	2	
9311109BBD	54	Shaft	2	
9311122ABA	55	Gasket	2	
G2176M1028109	56	Bolt	16	

Front Differential and Bracket

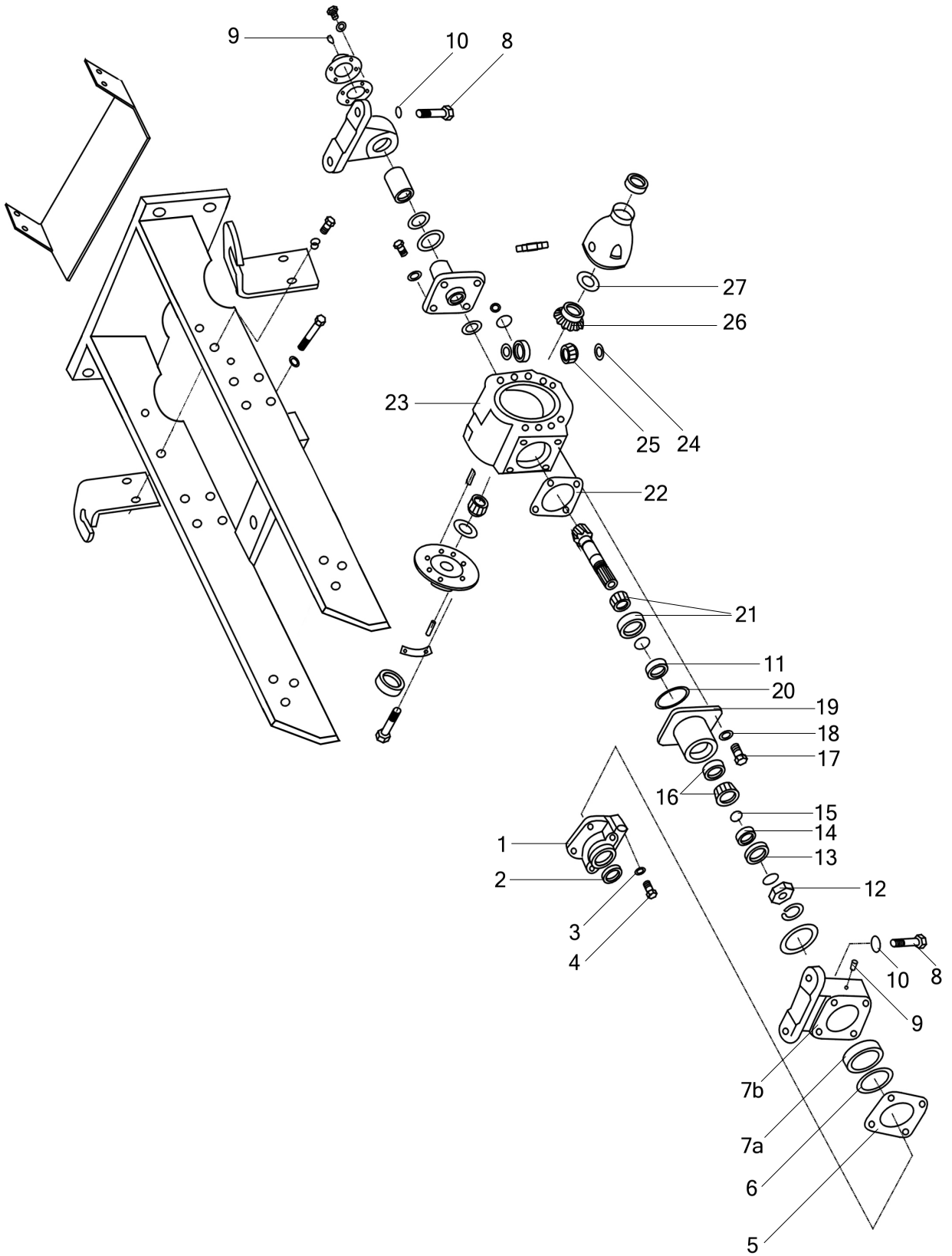

MUSA Part Number	Ref.	Description of Part	Unit Quantity	Remarks/ Service Bulletin No.
9311129BBD	1	Cover	1	
G1235764035	2	Seal	2	
G93878	3	Washer	4	
G578386M830	4	Screw	4	
9311128ABA	5	Gasket	1	
G1235767531	6	Seal	1	
9312040BBD	7	Bracket and Bush Consists of:	1	
9312402ABA	7a	→ Bush	1	
9312401BBD	7b	→ Bracket	1	
G578286M1655	8	Screw	6	
G115279M101	9	Nipple	2	
G938716	10	Washer	4	
9311305ABA	11	Spacer	1	
G81088M2715	12	Nut	1	
G987788FB355612F	13	Seal	1	
9311303ABA	14	Seat	1	
G3452822120355F	15	Seal	1	
G297842007106E	16	Bearing	1	
G217688M1228	17	Screw	6	
G938712	18	Washer	24	
9311301ABA01	19	Retainer	1	
G1235768531	20	Seal	1	
G2978427306E	21	Bearing	1	
9311121ABA	22	Shims	A.R	
9311101ABA01	23	House	1	
9311203ABA	24	Washer	2	
9311204ABA	25	Gear	2	
9311208ABA	26	Gear	2	
9311202ABA	27	Washer	2	

Front Differential and Bracket

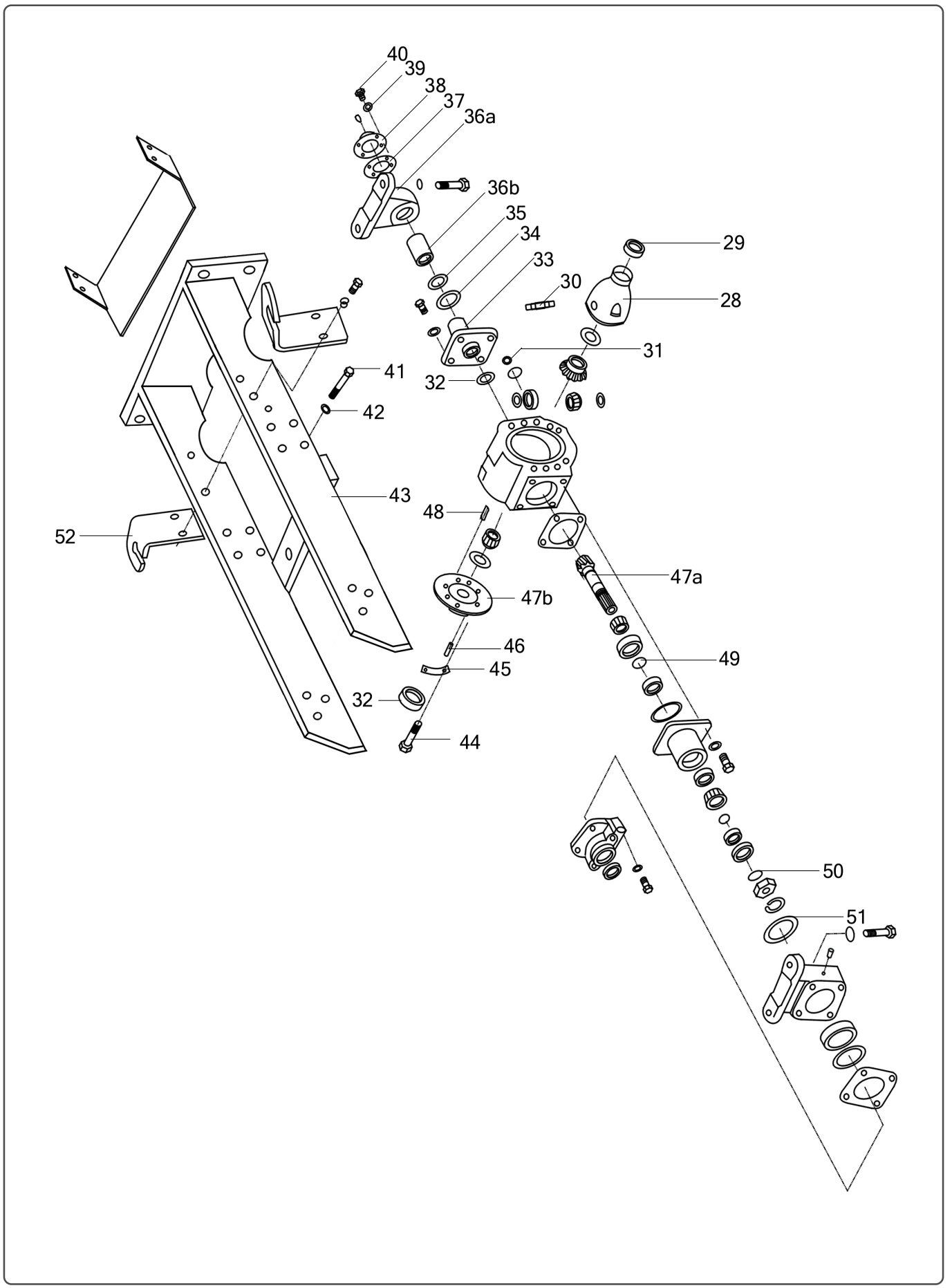

MUSA Part Number	Ref.	Description of Part	Unit Quantity	Remarks/ Service Bulletin No.
9311201ABA	28	House	1	
G297842007109E	29	Bearing	2	
9311205ABA	30	Shaft	1	
9550103AAA	31	Plug	1	
G1235763531	32	Seal	1	
9311125ABA	33	Shaft	1	
9311126ABA	34	Shims	A.R	
G1235767031	35	Seal	1	
9312020BBD	36	Bracket Consists of:	1	
9312201BBD	36a	→Bracket	1	
9312202ABA	36b	→Bush	1	
9311127ABA	37	Washer	1	
9312030ABA	38	Cover	1	
G93876	39	Washer	4	
G578386M612	40	Screw	4	
G578386M1240	41	Screw	11	
G938712	42	Washer	11	
9310090BBA	43	Bracket	1	
G578386M825109	44	Screw	4	
9311207ABA	45	Lock Washer	2	
G119868ga14	46	Pin	1	
‡	47	Duble Gear Consists of:	1	
9311302ABA01	47a	→ Gear	1	
9311206ABA	47b	→ Gear	1	
G119868ga35	48	Pin	1	
9311306ABA	49	Shims	A.R	
9311307ABA	50	Shims	A.R	
G1235769031	51	Seal	1	
9310114BBA	52	Bracket (R)	1	

Front Differential and Bracket

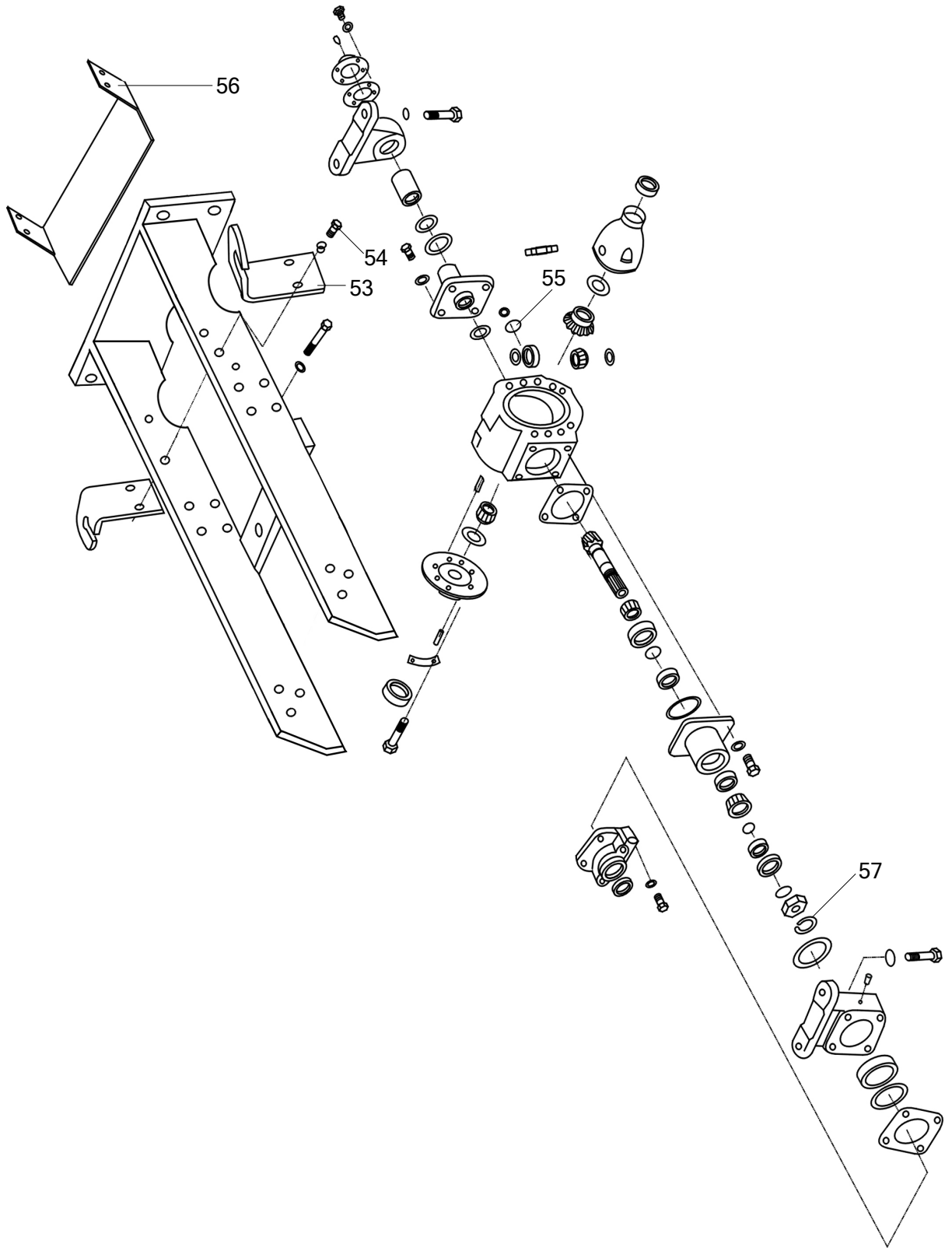

MUSA Part Number	Ref.	Description of Part	Unit Quantity	Remarks/ Service Bulletin No.
9310117BBA	53	Bracket (L)	1	
G578386M835	54	Screw	4	
710011142	55	Washer	1	
9312601BBA	56	Plate	1	
G8588827	57	Washer	1	

MAHINDRA
TRACTORS

Power Steering

Power Steering

PSU,Steering Wheel,Steering Cylinder and pipings

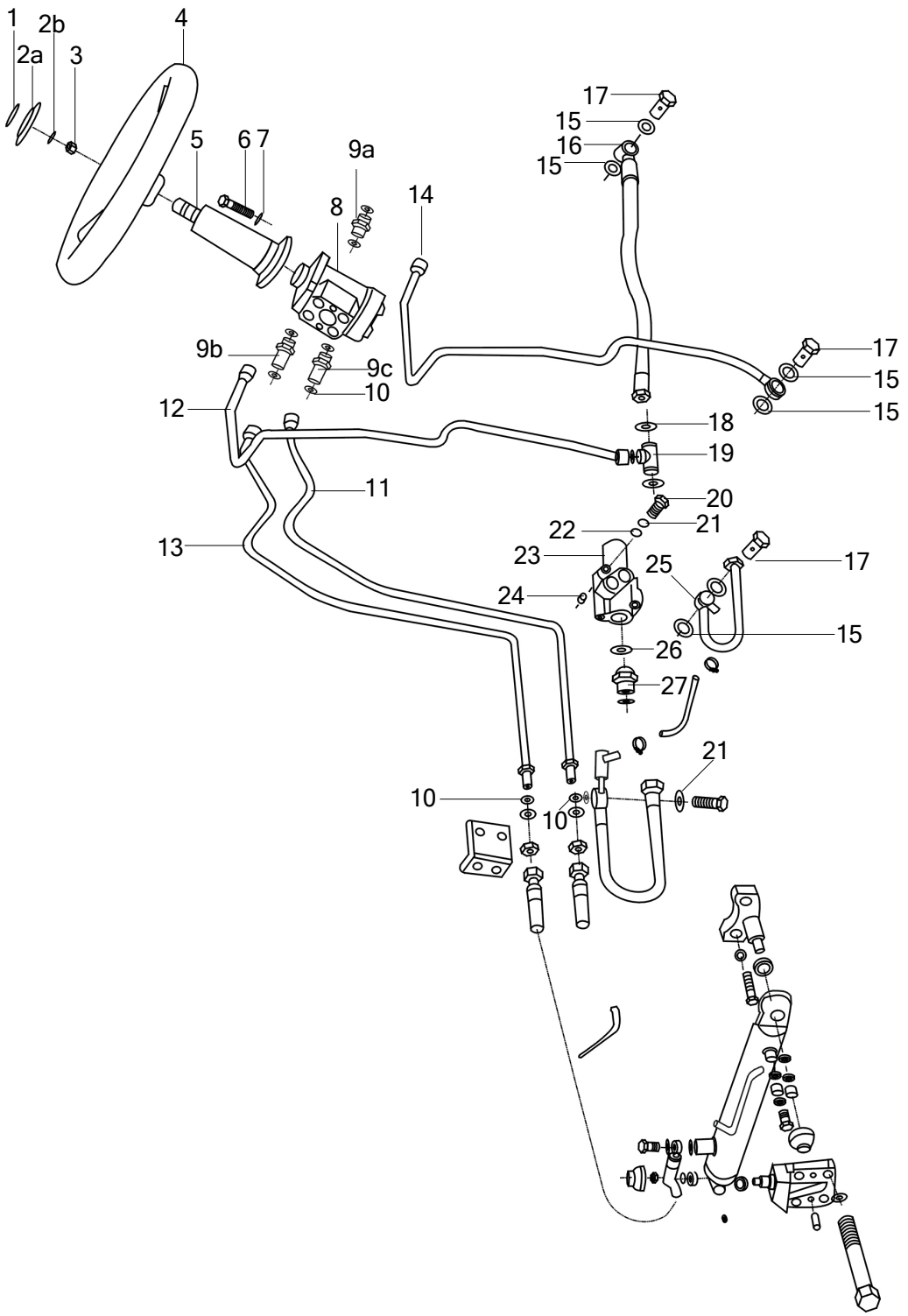

PSU,Steering Wheel,Steering Cylinder and pipings

MUSA Part Number	Ref.	Description of Part	Unit Quantity	Remarks/ Service Bulletin No.
9400301AAA	1	Sticker	1	
9400302BBB	2	Cover Consists of:	1	
‡	2a	→ Cover	1	
‡	2b	→ Circlip	1	
G617386M1615	3	Nut	1	
9400030BBB01	4	Wheel	1	
9401050BBA	5	Column	1	
G578386M1020	6	Screw	4	
G938710	7	Washer	4	
BZZI80	8	Box	1	
9400103BBA	9a	Connector	2	
9403070FBB	9b	Connector	1	
9403080FBB	9c	Connector	1	
G1235761419F	10	Seal	6	
9403030BBA02	11	Pipe	1	
9400070FBB	12	Pipe	1	
9403020BBA02	13	Pipe	1	
9400060FBB	14	Pipe	1	
J9827720	15	Washer	12	
9402040BBB	16	Hose	1	
9550307BBD	17	Bolt	3	
G1235761624F	18	Seal	3	
J9907714	19	Connector	1	
G578286M65	20	Screw	3	
G93878	21	Washer	6	
FLDD6	23	Valve	1	
9400108BBD	24	Pad	3	
9400080BBS01	25	Pin	1	
J9827724	26	Washer	1	
9402101BBS	27	Connector	1	

PSU,Steering Wheel,Steering Cylinder and pipings

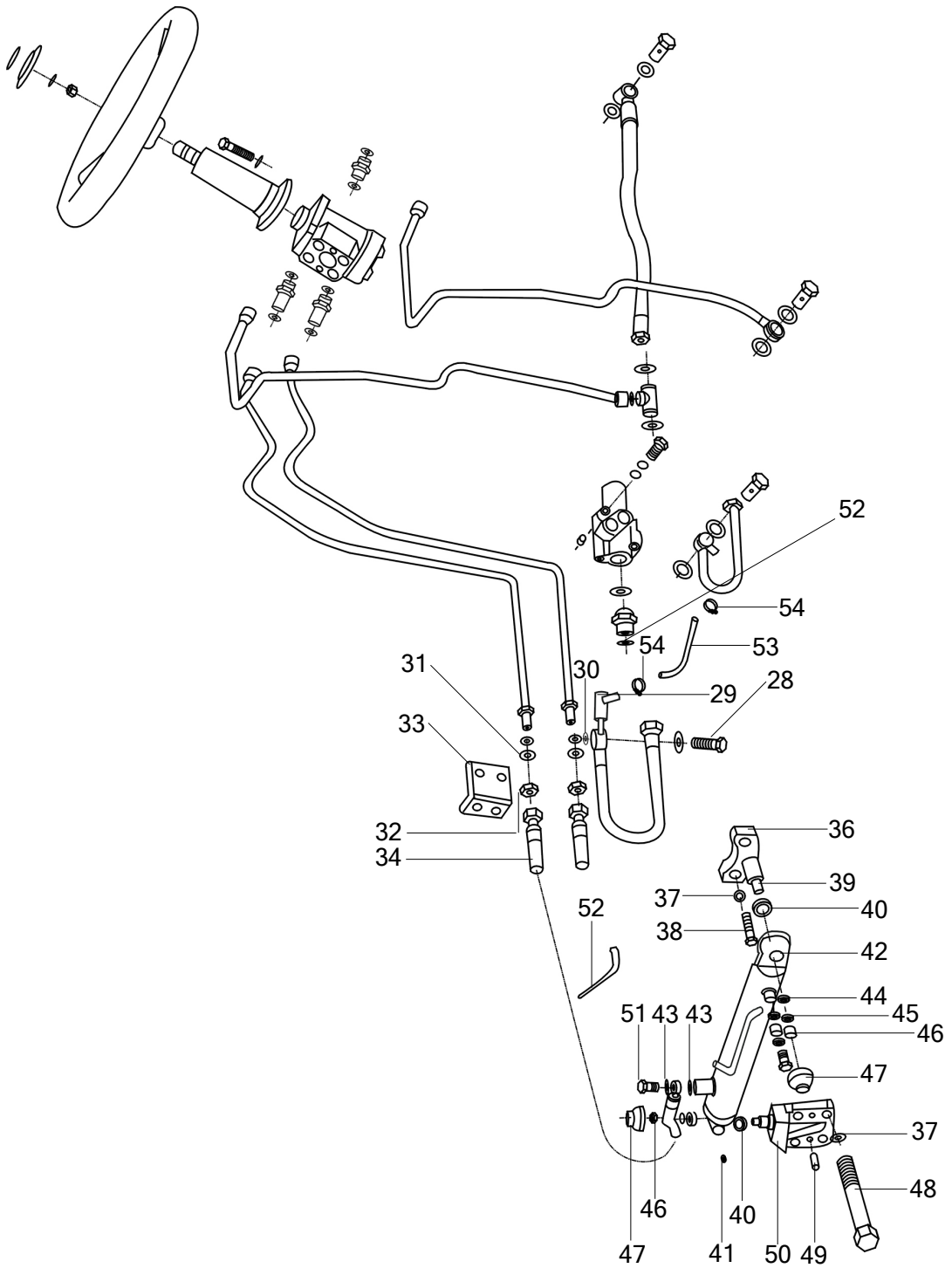

MUSA Part Number	Ref.	Description of Part	Unit Quantity	Remarks/ Service Bulletin No.
G578386M835	28	Screw	3	
9402050FBB	29	Hose I	1	
G1235772224F	30	Seal	1	
G938718	31	Washer	2	
G617286M1815	32	Nut	2	
9400109BBA01C	33	Support	1	
9402080FBB	34	Hose II	2	
9400105BBD	36	Support	1	
G938712	37	Washer	6	
9400106BBD	38	Screw	2	
G91863220	39	Pin	2	
9401112ABA	40	Packing	2	
G11538945M6	41	Nipple	2	
9401070ABA	42	Cylinder	1	
J10027714	43	Washer	4	
9401111ABA	44	Bush	2	
G8488512	45	Washer	2	
G945988M1215	46	Nut	2	
9310809AAA	47	Boot	2	
G578386M1235	48	Screw	4	
G11986A1030	49	Pin	2	
9400104BBD	50	Support	1	
J99977M141532	51	Bolt	2	
G1235762024F	52	O-ring	1	
9580102BAB	53	Pipe	1	
HG091427	54	Clip	2	

MAHINDRA
TRACTORS

Transmission

Transmission

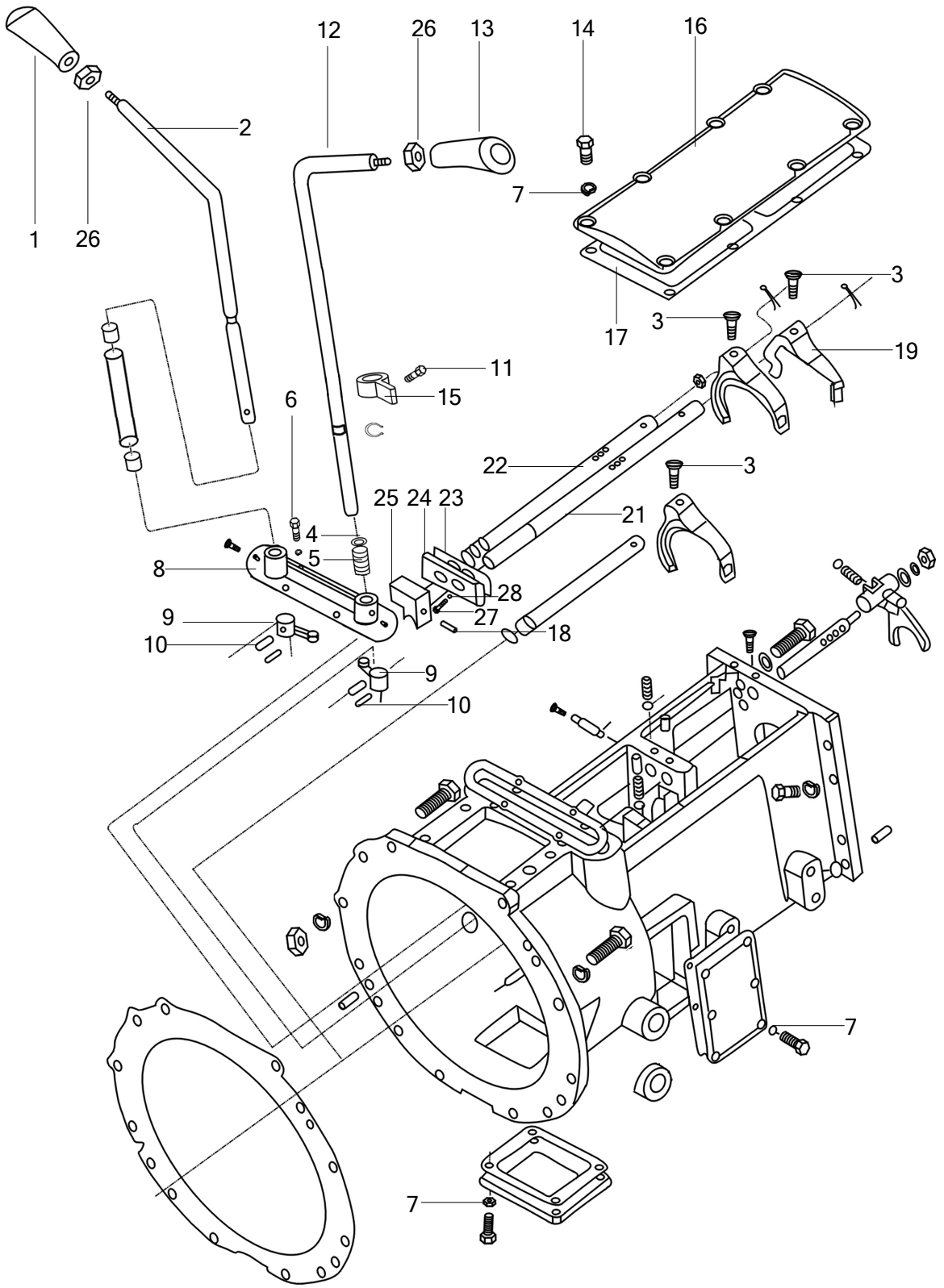
12
26
13
14
16
2
7
1
26
3
3
17
19
11
15
6
22
3
25
24
23
21
4
5
8
28
27
9
18
10
9
10
7
7

Front Housing,F-R Shifter and Speed Shifter Mechanism

MUSA Part Number	Ref.	Description of Part	Unit Quantity	Remarks/ Service Bulletin No.
9370123BBB	1	Handle	1	
9370145BBB04C	2	Lever	1	
9370151BBB	3	Bolt	3	
G958516	4	Washer	2	
9370142BBB	5	Spring	1	
G578386M820	6	Bolt	4	
G93878	7	Washer	22	
9371401BBB02	8	Cover	1	
9370131BBB	9	Shift pin	2	
G87986822	10	Pin	2	
9370151BBB	11	Screw	1	
9370146BBB04	12	Lever	1	
9370122BBB	13	Handle	1	
G578386M830	14	Bolt	8	
9370190BBS01	15	Sleeve	1	
9370132BBB	16	Cover	1	
9370141BBB	17	Gasket	1	
G87986628	18	Pin	1	
9370129BBB	19	Fork	1	
9370130BBB	20	Fork	1	
9370124BBB02	21	Rail	1	
9370141BBB	22	Rail	1	
9370140BBB	23	Gasket	1	
9370138BBB	24	Cover	1	
9370137BBB	25	Shift block	1	
G617086M14	26	Nut	2	
G578386M620	27	Bolt	2	
G93876	28	Washer	2	

Front Housing,F-R Shifter and Speed Shifter Mechanism

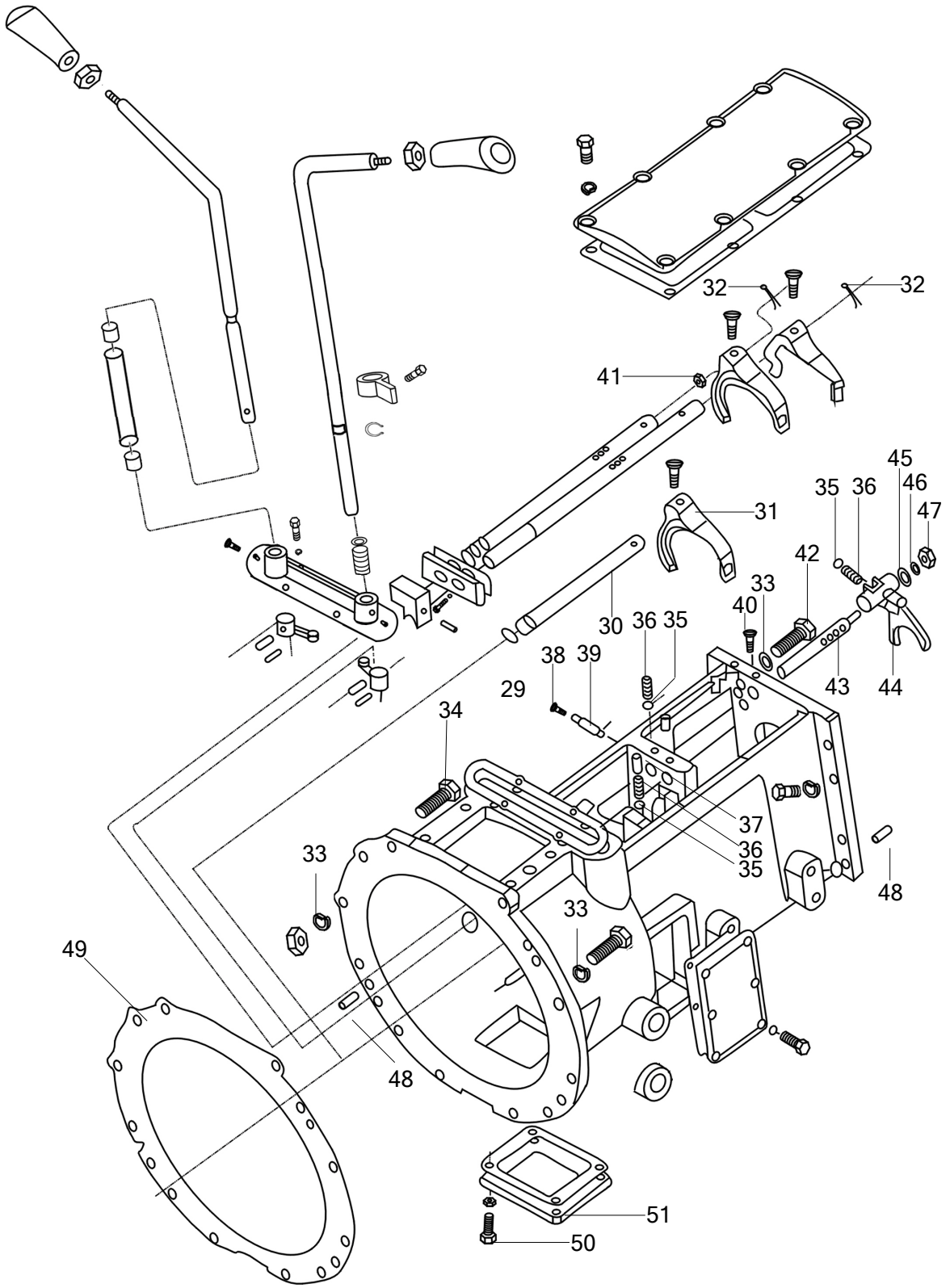

MUSA Part Number	Ref.	Description of Part	Unit Quantity	Remarks/ Service Bulletin No.
G1235762224	29	“O”-Ring	3	
9370133BBB03	30	Rail	1	
9370143BBB	31	Fork	1	
G9186430	32	Pin	2	
G938712	33	Washer	16	
G578386M1250	34	Bolt	2	
G3088938	35	Ball	4	
9370133AAA	36	Spring	4	
G1198610335	37	Pin	1	
Q37799M12	38	Plug	1	
9370149BBB	39	Pin	2	
G7585M830	40	Screw	1	
G617386M1815	41	Nut	6	
G578286M1245	42	Bolt	2	
9370135BBB	43	Rail	1	
9370134AAA	44	Fork	1	
G978510	45	Washer	1	
G938710	46	Washer	1	
G617086M10	47	Nut	1	
G11986A830	48	Pin	4	
9370150BBB	49	Gasket	1	
G578386M812	50	Bolt	4	
9210107BAA	51	Cover	1	

Front Housing,F-R Shifter and Speed Shifter Mechanism

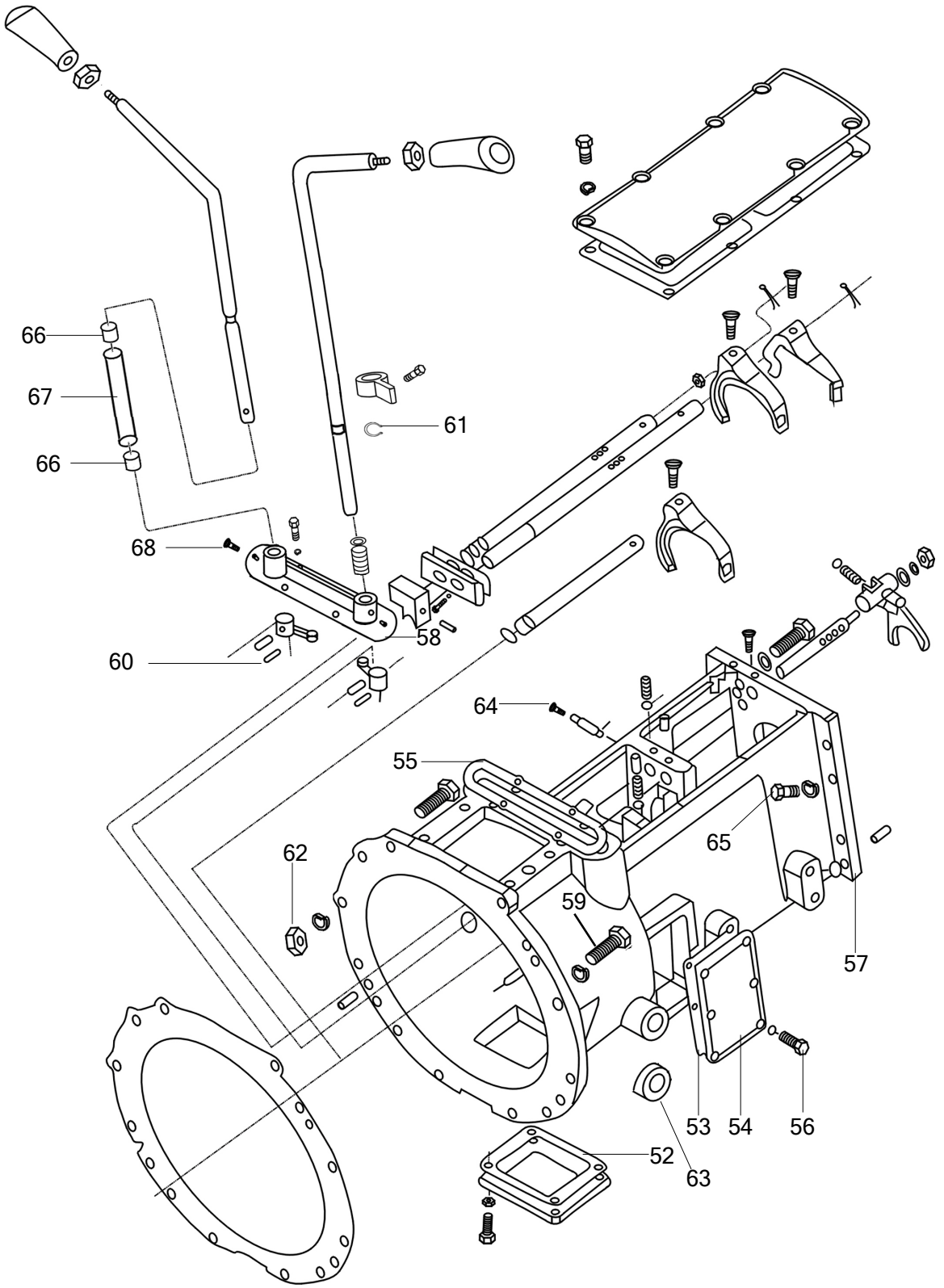

MUSA Part Number	Ref.	Description of Part	Unit Quantity	Remarks/ Service Bulletin No.
9210108BAA	52	Gasket	1	
9370127BBB	53	Gasket	1	
9370126BBB	54	Cover	1	
9370155BBB	55	Gasket.Cover CPTE.Clutch Housing	1	
G578386M825	56	Bolt	6	
9370101BBB01	57	Housing	1	
G115279M6	58	Grease Nipple	1	
G578200M1235109	59	Bolt	12	
G87986522	60	Pin	2	
G8948616	61	Washer	1	
G617086M12	62	Nut	2	
9370162AAA	63	Sleeve	2	
1023015DAH	64	Rubber plug	1	
G578200M1235	65	Bolt	9	
RCB1615	66	Bearing	2	
9371403BBB	67	Long Pipe	1	
M6x6G4.8	68	Screw	1	

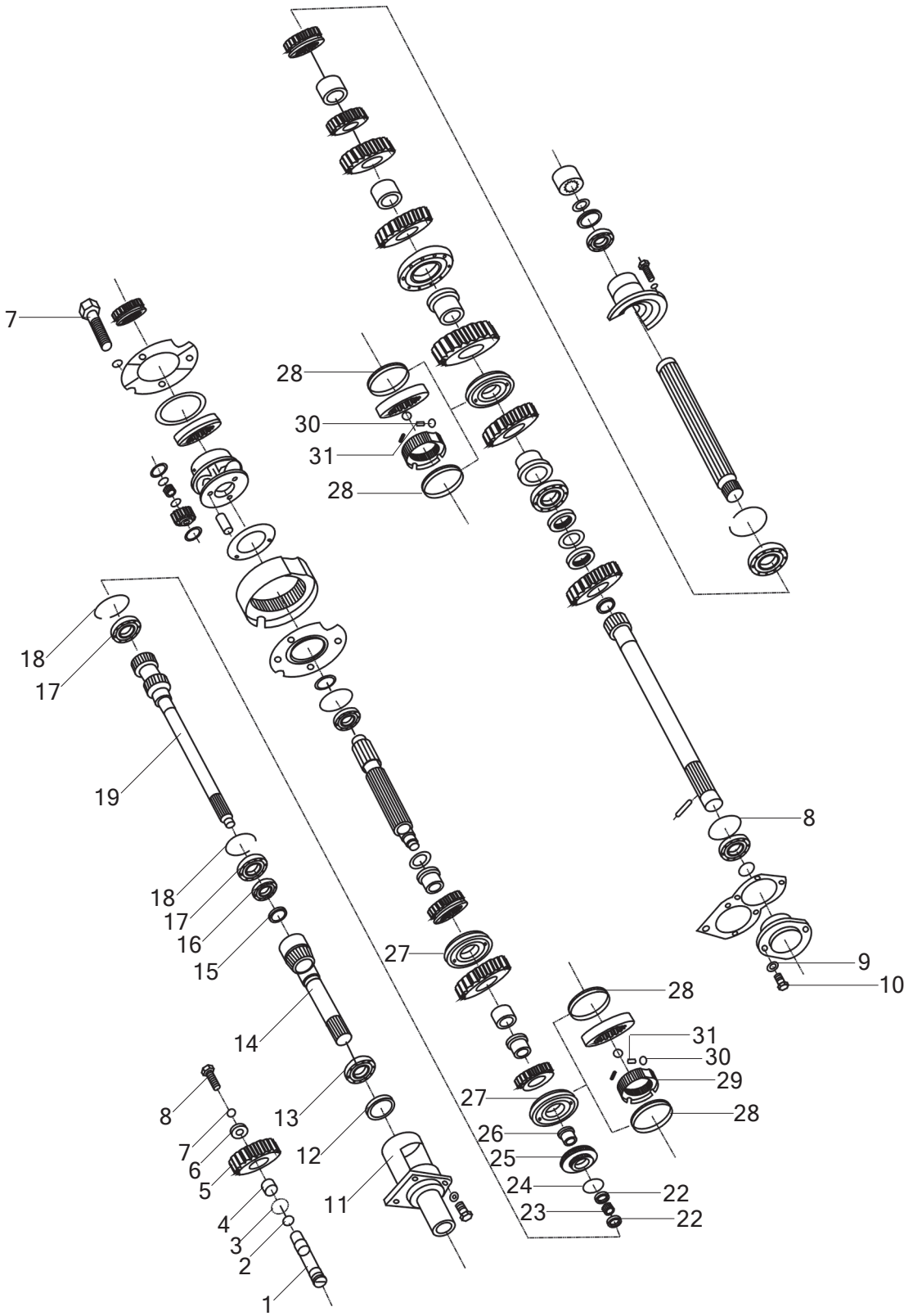
7
28
30
31
28
18
17
19
18
17
16
15
14
8
7
6
5
4
3
2
1
13
12
11
27
27
26
25
24
23
22
22
28
31
30
29
28
8
9
10

MUSA Part Number	Ref.	Description of Part	Unit Quantity	Remarks/ Service Bulletin No.
9370116BBB	1	Shaft	1	
G1235762524	2	“O”- seal	1	
9370114BBB	3	Washer	1	
9370803BBB	4	Spacer	1	
9370080BBB	5	Gear and bush assy	1	
9370117BBB	6	Washer	1	
G938712	7	Washer	5	
G578286M1220	8	Bolt	1	
G578386M1020	9	Bolt	8	
G938710	10	Washer	12	
9370103BBB01	11	Retainer	1	
H469267DSZ406210	12	Seal	1	
G27689108	13	Bearing	1	
9370102BBB01	14	Shaft	1	
G469267DSZ254010	15	Seal	1	
G27689205	16	Bearing	1	
G27689207	17	Bearing	2	
G8938672	18	Circlip	3	
9370117BBB	19	Shaft	1	
9370153AAA	22	Washer	2	
G3098425198	23	Needle	28	
9370136BBB	24	Half	2	
9370050BBB	25	Gear	1	
9370111BBB	26	Shaft Sleeve	1	
9371020BBB	27	Synchronizer	2	
9371201BBB	28	Synchronizer Ring	6	
9371202BBB	29	Hub	6	
G308891564	30	ball	9	
9371203BBB	31	Guide Block	9	

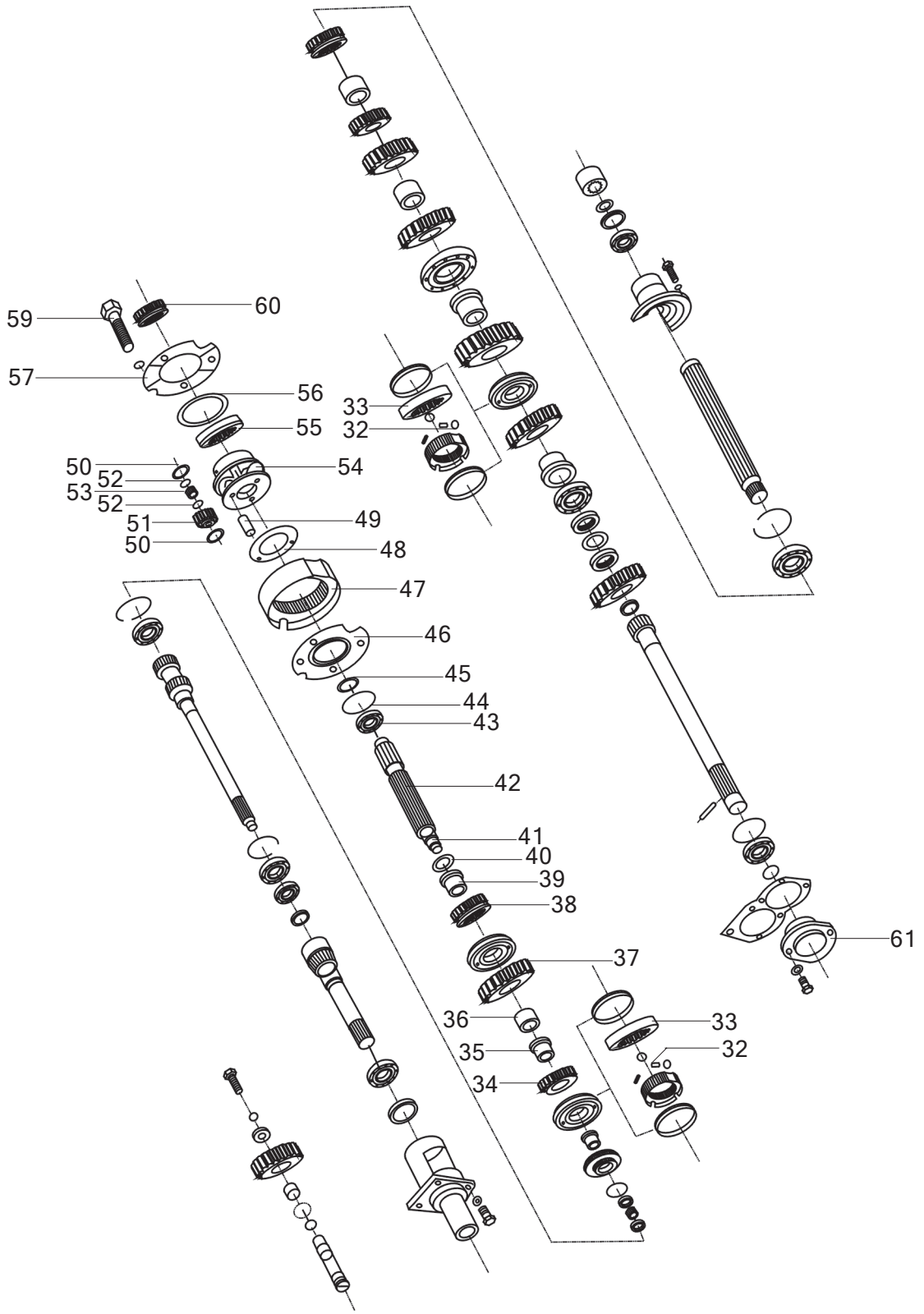
59
60
57
56
55
54
50
52
53
52
51
50
49
48
47
46
45
44
43
42
41
40
39
38
37
36
35
34
33
32
33
32
61

MUSA Part Number	Ref.	Description of Part	Unit Quantity	Remarks/ Service Bulletin No.
9371204BBB	32	Spring	9	
9371205BBB	33	Coupler	9	
9370040BBB	34	Gear	1	
9370112BBB	35	Shaft sleeve	1	
9370111BBB	36	Shaft sleeve	1	
9370030BBB	37	Gear	1	
9370020BBB	38	Gear	1	
9370110BBB	39	Shaft Sleeve	1	
9370147BBB	40	Washer	1	
9370144BBB	41	Key	1	
9370114BBB	42	Shaft	1	
G2778950207	43	Bearing	1	
G3058972786	44	Ring	1	
G8948635	45	Circlip	1	
9370148BBB01	46	Cap	1	
9370901BBB01	47	Gear	1	
9370301AAA	48	Plate	1	
9370302AAA	49	Shaft	3	
9370304AAA	50	Plate	6	
9370307AAA	51	Gear	3	
9370303AAA	52	Spacer	6	
G309773198	53	Needle	66	
9370311AAA	54	Carrier	1	
9370311AAA	55	Coupler	1	
9370305AAA	56	Plate	1	
9370306AAA	57	Cover	1	
G578286M1270	59	Bolt	4	
9370168AAD	60	Coupler	1	
9370103BBD	61	Cap	1	

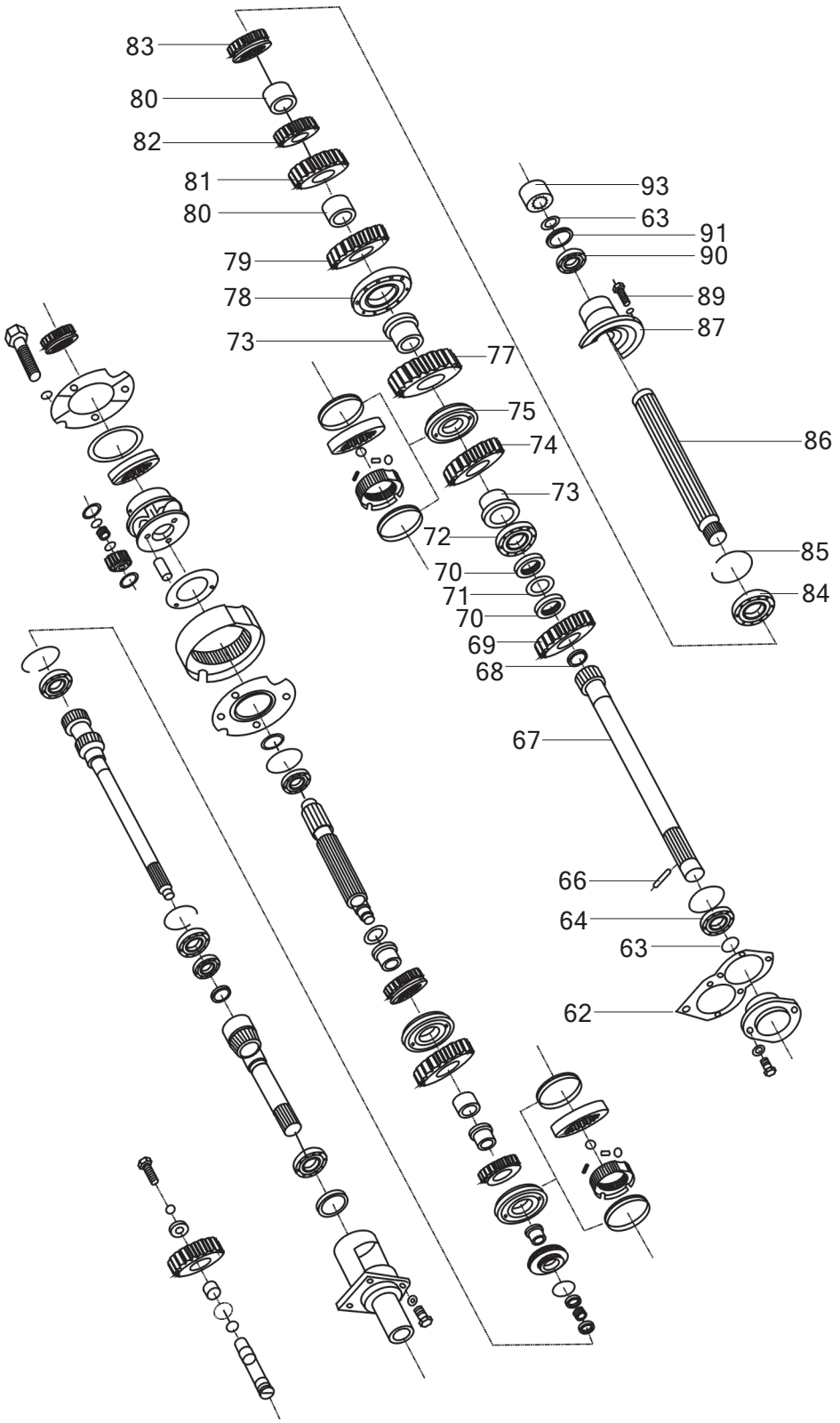
83
80
82
81
80
79
78
73
77
75
74
73
72
70
71
70
69
68
67
66
64
63
62
93
63
91
90
89
87
86
85
84

MUSA Part Number	Ref.	Description of Part	Unit Quantity	Remarks/ Service Bulletin No.
9370139BBB	62	Gasket	1	
G8948630	63	Circlip	2	
G27689306	64	Bearing	1	
G87986645	66	Pin	1	
9370118BBB	67	shaft	1	
9370118BBD	68	Collar	1	
9370114BBD	69	gear	1	
G81276M3915	70	nut	2	
G8587639	71	Washer	1	
G27689208	72	Bearing	1	
9370115BBB	73	Shaft sleeve	2	
9370060BBB	74	gear	1	
9371030BBB	75	Synchronizer	1	
9371301BBB	76	Hub	1	
9370070BBB	77	Gear	1	
G27689209	78	Bearing	1	
9370109BBB	79	Gear	1	
9370105BBB	80	Shaft sleeve	2	
9370108BBB	81	Gear	1	
9370107BBB	82	Gear	1	
9370106BBB	83	Gear	1	
G2778950209	84	Bearing	1	
G3058985	85	Circlip	1	
9370121BBB	86	Shaft	1	
9370134BBB	87	Cap	1	
G578386M1025	89	Bolt	4	
G27689106	90	Bearing	1	
G8938655	91	Circlip	1	
9370113BAA	93	Coupler	1	

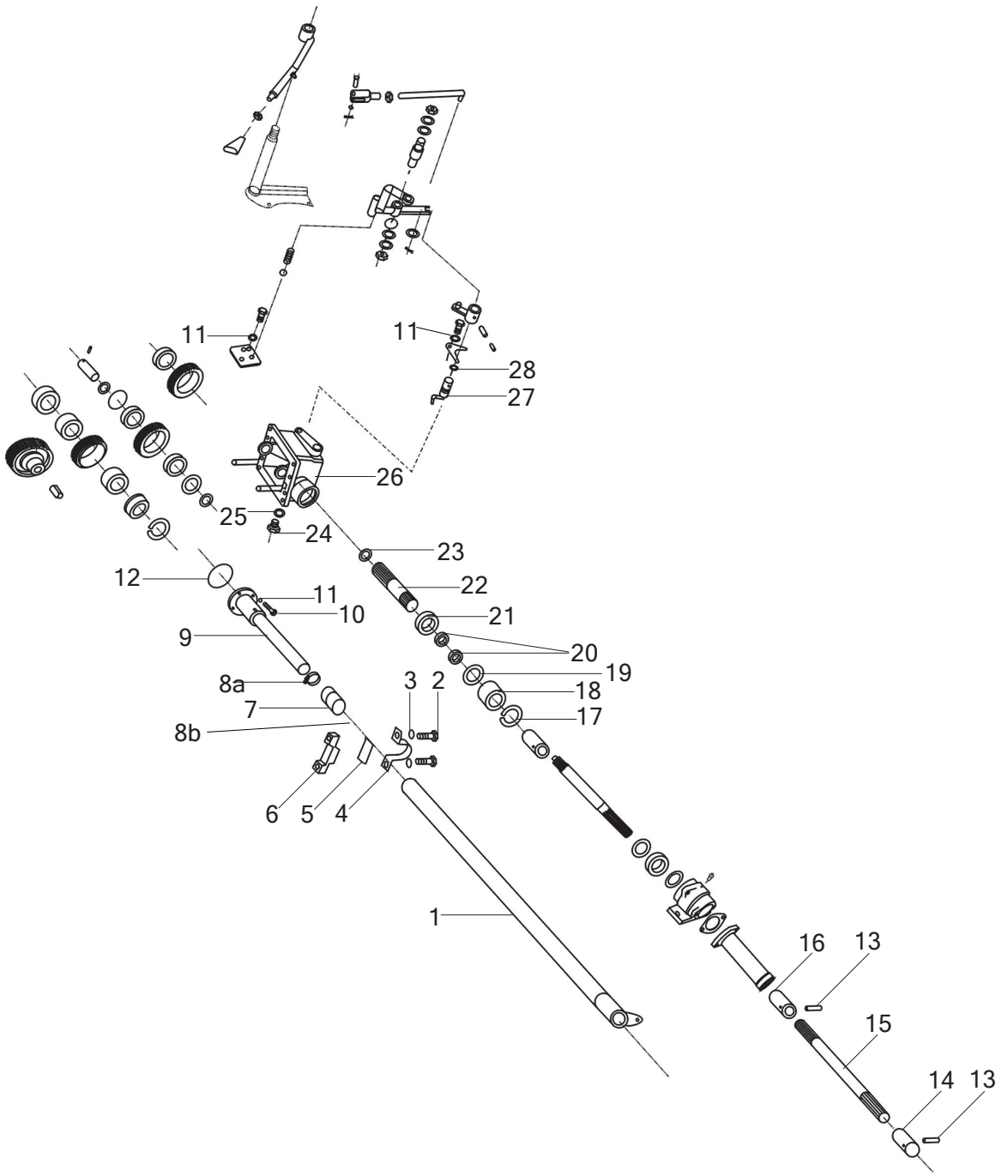
11
11
28
27
26
25
24
23
12
11
10
22
21
9
20
19
8a
3
2
18
7
17
8b
6
5
4
1
16
13
15
14
13

MUSA Part Number	Ref.	Description of Part	Unit Quantity	Remarks/ Service Bulletin No.
9420020BBA	1	Sleeve	1	
G2176M104088	2	Bolt	2	
G938710	3	Washer	9	
9420121ABA	4	Clip	1	
9420123ABA	5	Rubber Pad	1	
9420122ABA	6	Pad	1	
9420112ABA	7	O-Seal	1	
HG094670	8a	Clip	1	
HG092751	8b	Clip	1	
9420060BBA	9	Sleeve	1	
G578386M825	10	Bolt	6	
G93878	11	Washer	9	
G1235768031F	12	Seal	1	
G87986835	13	Pin	2	
9420111BBD	14	Connector	1	
9420107BBA	15	Shaft	1	
9420110BBD	16	Connector	1	
G8938655	17	Circlip	1	
9420110ABA	18	Retainer	1	
9420120ABA	19	Seal	1	
G987788FB254210F	20	Seal	3	
G27689205	21	Bearing	1	
9420106ABA	22	Shaft	1	
G8948624	23	Circlip	1	
9380120AA001	24	Plug	1	
71001020	25	Washer	1	
9420108BBD	26	Transfer case body	1	
9420070ABA	27	Rod	1	
G1235762024F	28	O-Seal	1	

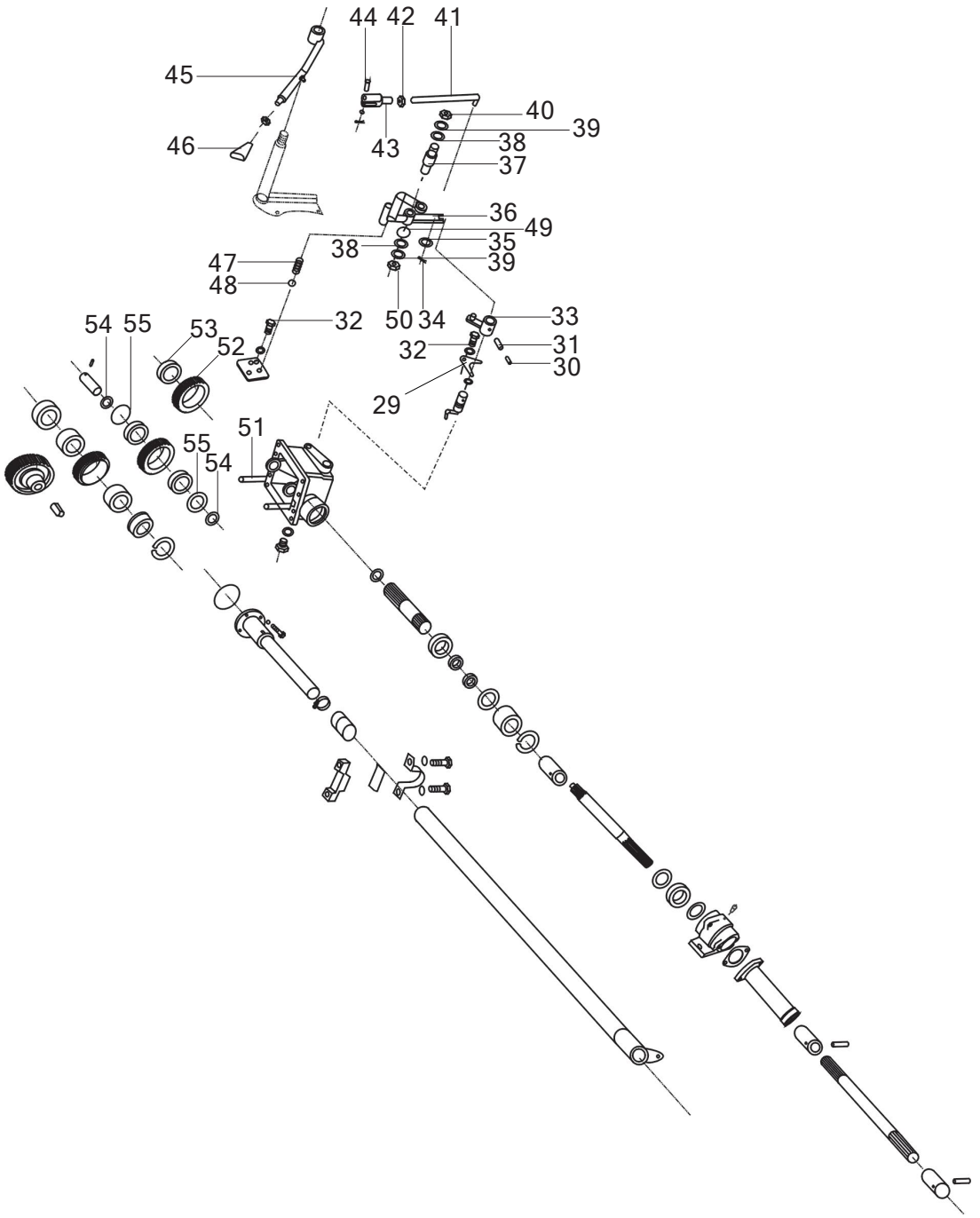
44
42
41
45
40
39
46
43
38
37
36
49
38
35
39
47
48
50
34
33
54
55
53
32
52
32
31
30
29
51
55
54

MUSA Part Number	Ref.	Description of Part	Unit Quantity	Remarks/ Service Bulletin No.
9420113ABA	29	Plate	1	
G87986532	30	Pin	1	
G87986832	31	Pin	1	
G578386M816	32	Bolt	3	
9420080ABA	33	Arm	1	
G91863225	34	Pin	2	
G978510	35	Washer	2	
9420040BBA01	36	Lever	1	
9420114ABA	37	Shaft	1	
G978512	38	Washer	2	
G938712	39	Washer	2	
G617086M12	40	Nut	1	
9420106BBD	41	Link	1	
G617086M10	42	Nut	1	
9420123BAB	43	Fork	1	
G88286B1028	44	Pin	2	
9420030BBB01	45	Lever	1	
9420050BBA	46	Handle	1	
9370133AAA	47	Spring	1	
G3088910G100B	48	Ball	1	
G1235761424F	49	O-Seal	1	
G617086M12	50	Nut	1	
9420125ABA	51	Pin	2	
9420105ABA	52	Gear	1	
G27689304	53	Bearing	1	
9420116ABA	54	Spacer	2	
G3058947527	55	Circlip	2	

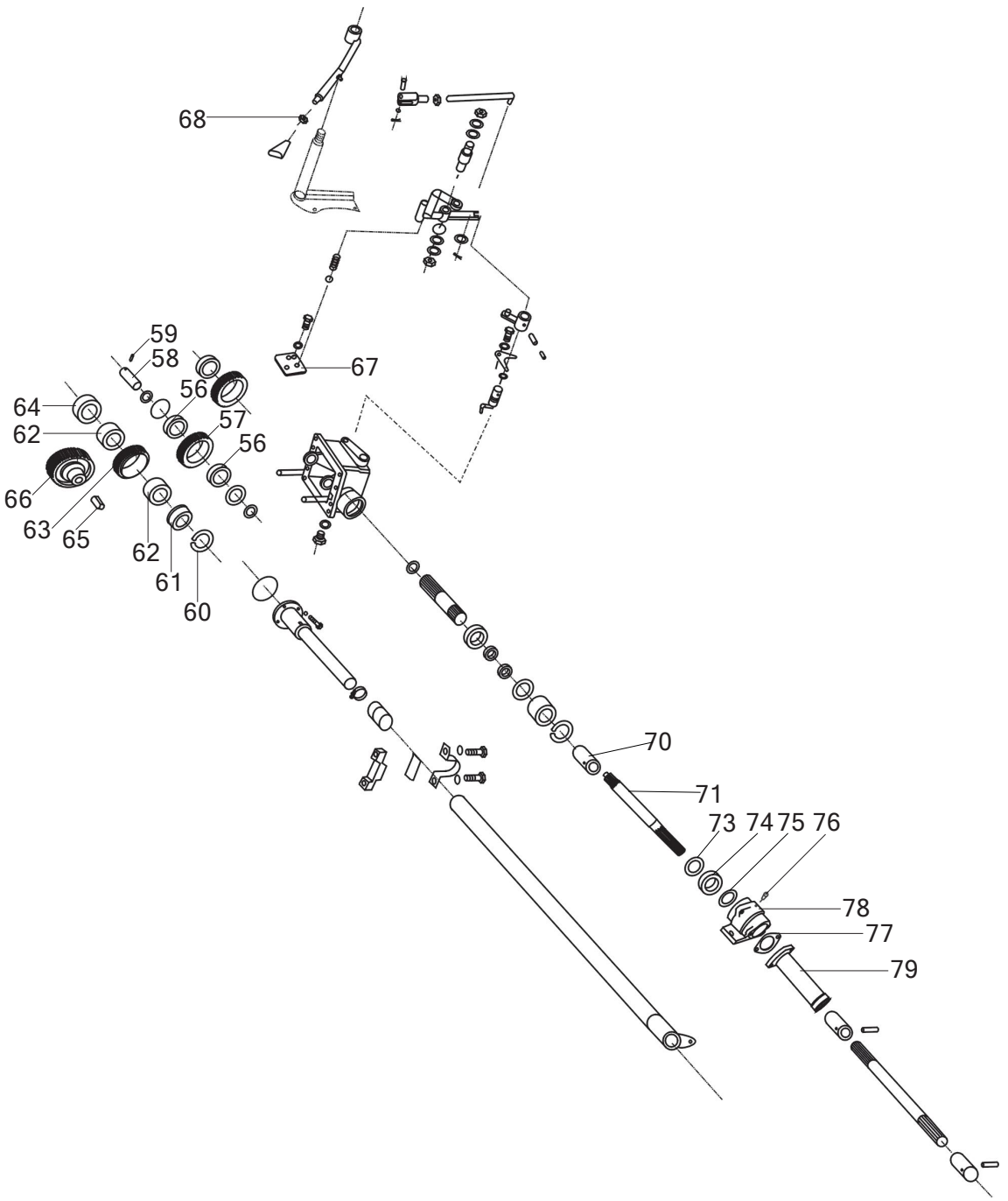
68
67
59
58
56
57
56
64
62
66
63
65
62
61
60
70
71
73
74
75
76
78
77
79

MUSA Part Number	Ref.	Description of Part	Unit Quantity	Remarks/ Service Bulletin No.
G2778950204	56	Bearing	2	
9420104ABA	57	Gear	1	
9420109ABA	58	Shaft	1	
G87986635	59	Pin	1	
G8948630	60	Circlip	1	
9420112BBD	61	Spacer	1	
G278894524906	62	Bearing	2	
9420103ABA	63	Gear	1	
9420107ABA	64	Spacer	1	
9380115AAA	65	Key	1	
9420102ABA	66	Gear	1	
9421050ABA	67	Plate	1	
G617286M14	68	Nut	1	
9420111ABA	70	Connector	1	
9420117BBB	71	Shaft	1	
G968512	73	Washer	1	
G2778960205	74	Bearing	1	
G1235765531	75	O-Seal	1	
G115276M6	76	Nipple	1	
9421401ABA	77	Paper Washer	1	
9420118ABA	78	Shaft seat	1	
9420128ABA	79	Connector	1	

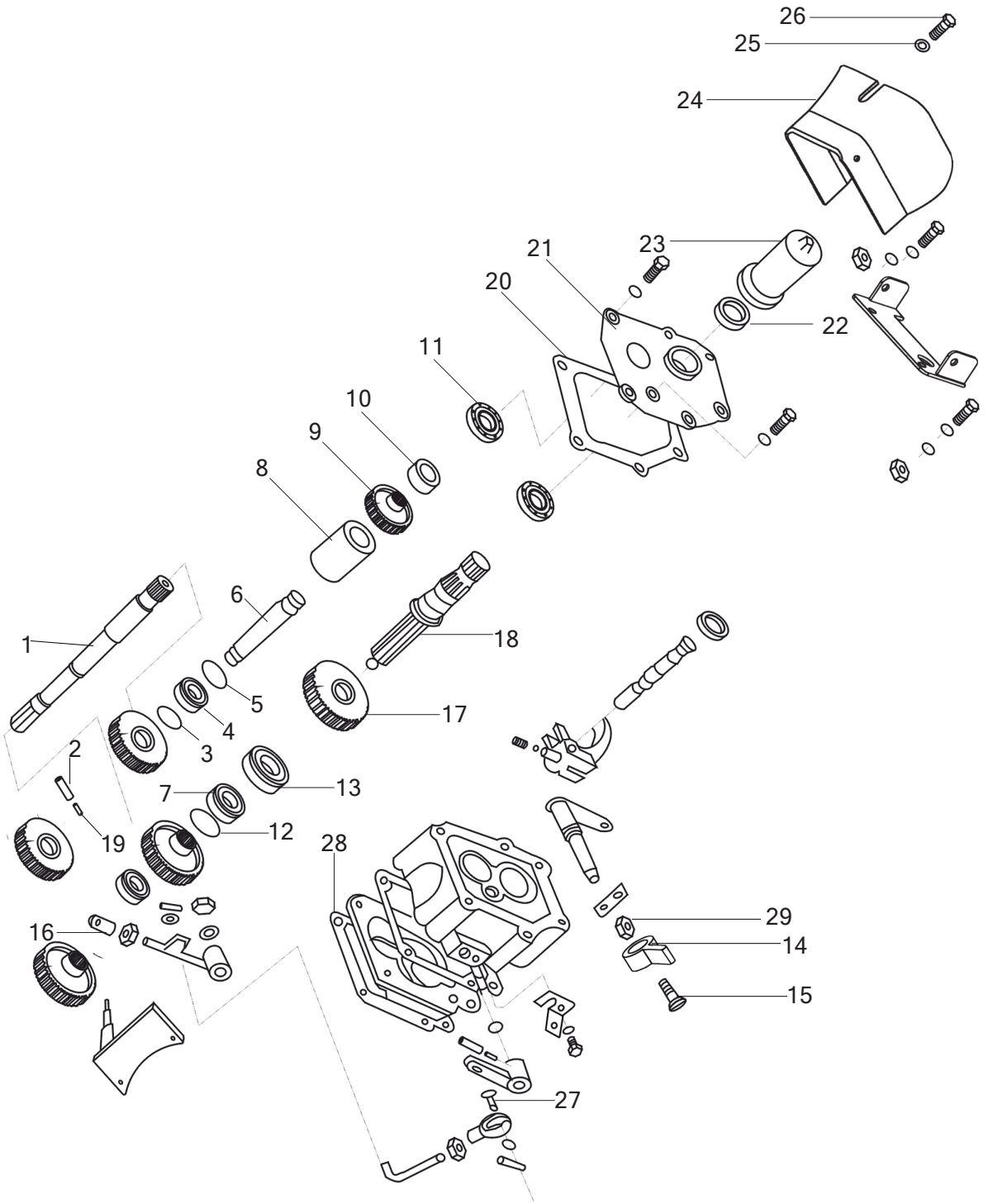
26
25
24
23
21
20
22
11
10
9
8
6
1
18
5
17
4
3
2
7
13
19
12
28
29
16
14
15
27

MUSA Part Number	Ref.	Description of Part	Unit Quantity	Remarks/ Service Bulletin No.
9410101BBD	1	Shaft	1	
G87986850	2	Pin	1	
G8948630	3	Circlip	2	
G2778950306	4	Bearing	1	
G3058972786	5	Circlip	1	
9410111BAA	6	Shaft	1	
G27689106	7	Bearing	1	
9410110AAB	8	Spacer	2	
9410109BAA	9	Gear	1	
9410121BAA	10	Spacer	1	
G27689306	11	Bearing	2	
G3058980866	12	Circlip	2	
G2778950307	13	Bearing	1	
9410120BBS	14	Sleeve	2	
9410128BBS	15	Screw	2	
9410090BBB	16	Handle	1	
9410117BBA	17	Gear	1	
9410020BAA	18	Shaft	1	
G87986550	19	Pin	1	
9410113AAB	20	Gasket	1	
9410114BAA	21	Cover	1	
G987788FB355612F	22	Seal	1	
9410104AAA	23	Cover	1	
9410050FBB	24	Guard	1	
G938712	25	Washer	6	
G578286M12160	26	Bolt	6	
G88286B1030	27	Pin	1	
9410103AAA	28	Gasket	2	
G617220008	29	Nut	2	

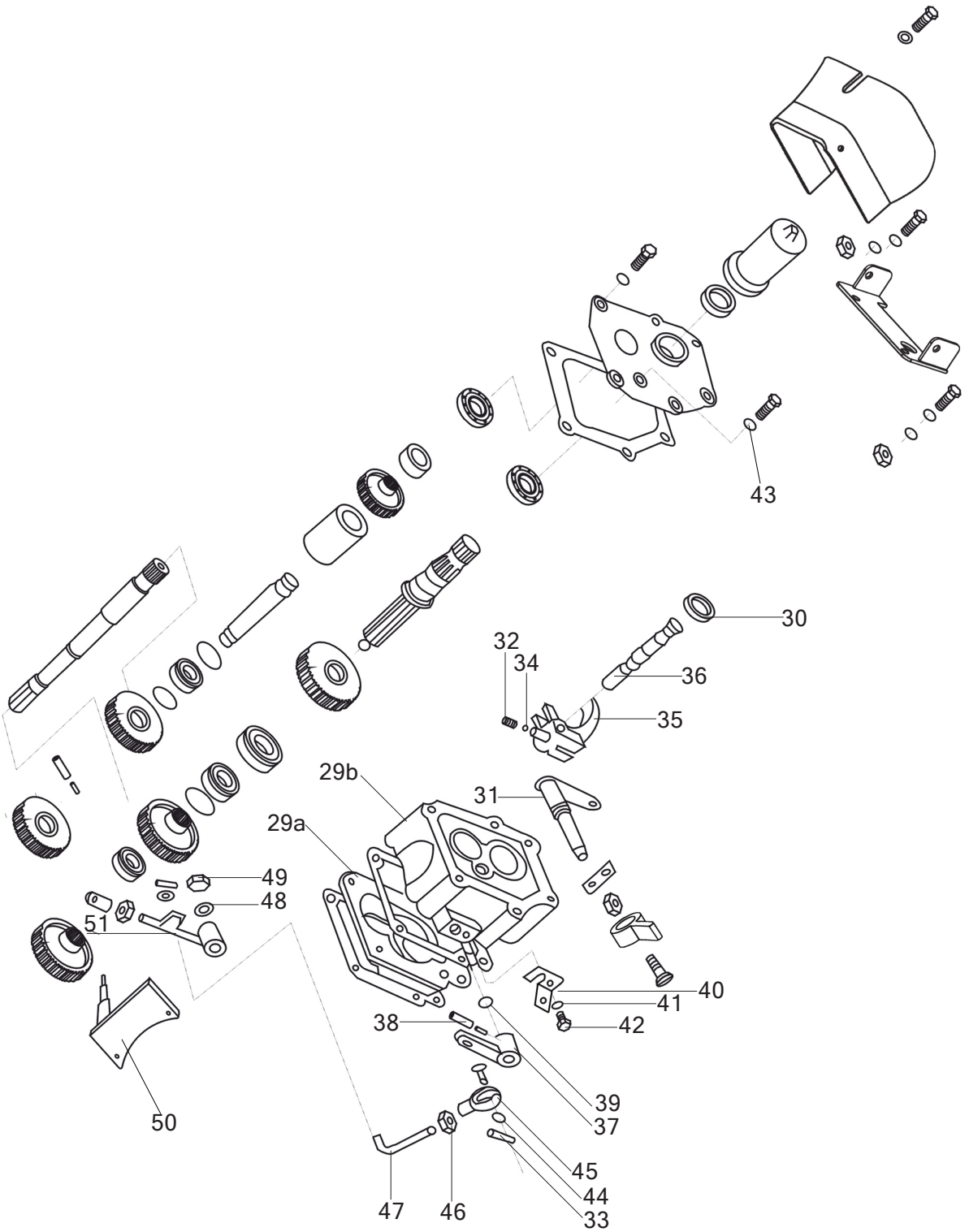
43
30
32
34
36
35
29b
31
29a
49
48
51
40
41
42
38
39
37
50
45
44
33
47
46

MUSA Part Number	Ref.	Description of Part	Unit Quantity	Remarks/ Service Bulletin No.
9410040BAA02	29	Housing Assembly Consists of:	1	
9410401BAA	29a	→ Cover	1	
9410402BAA02	29b	→ Housing	1	
G8948622	30	Circlip	1	
9410030AAB	31	Shift	1	
9410120AAB	32	Spring	1	
G91863225	33a	Pin	1	
G91863220	33b	Pin	2	
G308898G100B	34	Ball	1	
9410106AAB	35	Fork	1	
9410107BBB	36	Rail	1	
9410070BAB	37	Rocker	1	
G87986835	38a	Pin	1	
G87986535	38b	Pin	1	
G1235762524	39	Seal	1	
9410105BBB03C	40	Stop	1	
G938710	41	Washer	1	
G578386M1016	42	Bolt	1	
710011102	43	Washer	1	
G978510	44	Washer	2	
9410123BAB	45	Fork	1	
G617186M101	46	Nut	1	
9410124BAB	47	Link	1	
G968512	48	Washer	1	
G617086M12	49	Nut	1	
9410080BBB01	50	Bracket	1	
9410020BBB02	51	Lever	1	

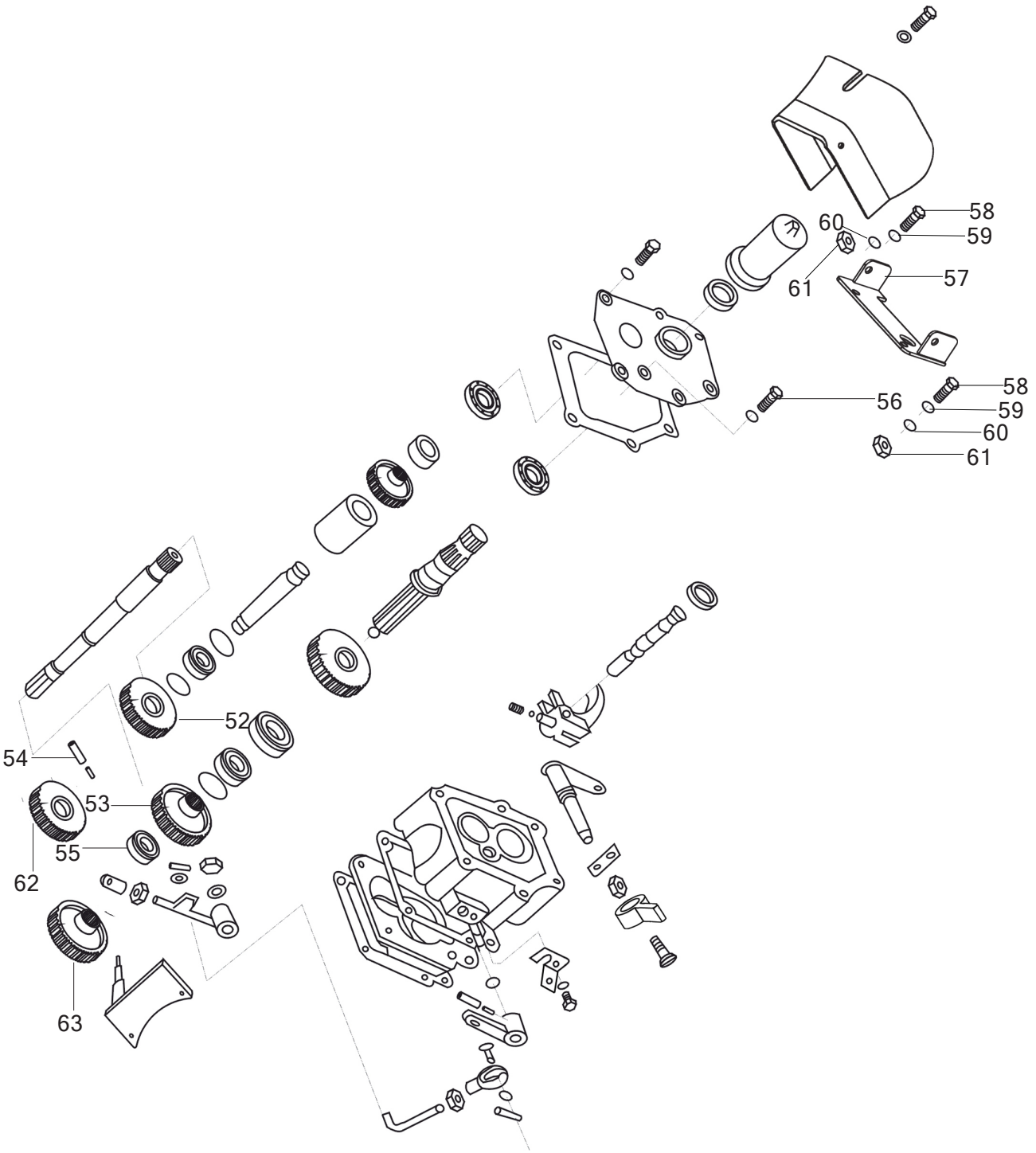
58
59
60
61
57
58
59
60
61
56
52
54
53
55
62
63

MUSA Part Number	Ref.	Description of Part	Unit Quantity	Remarks/ Service Bulletin No.
9410104BBD	52	Gear	1	
9410103BBD	53	Gear	1	
G87986550	54	Pin	1	
G27689206	55	Bearing	1	
G578386M1012	56	Bolt	1	
941005BBS	57	Support plant	1	
G578300M1025	58	Bolt	2	
G978510	59	Washer	2	
G938710	60	Washer	2	
G617000M10	61	Nut	2	
9410102BBD	62	Gear	1	
9410108BBD	63	Gear	1	

Rear axle Housing and Levers

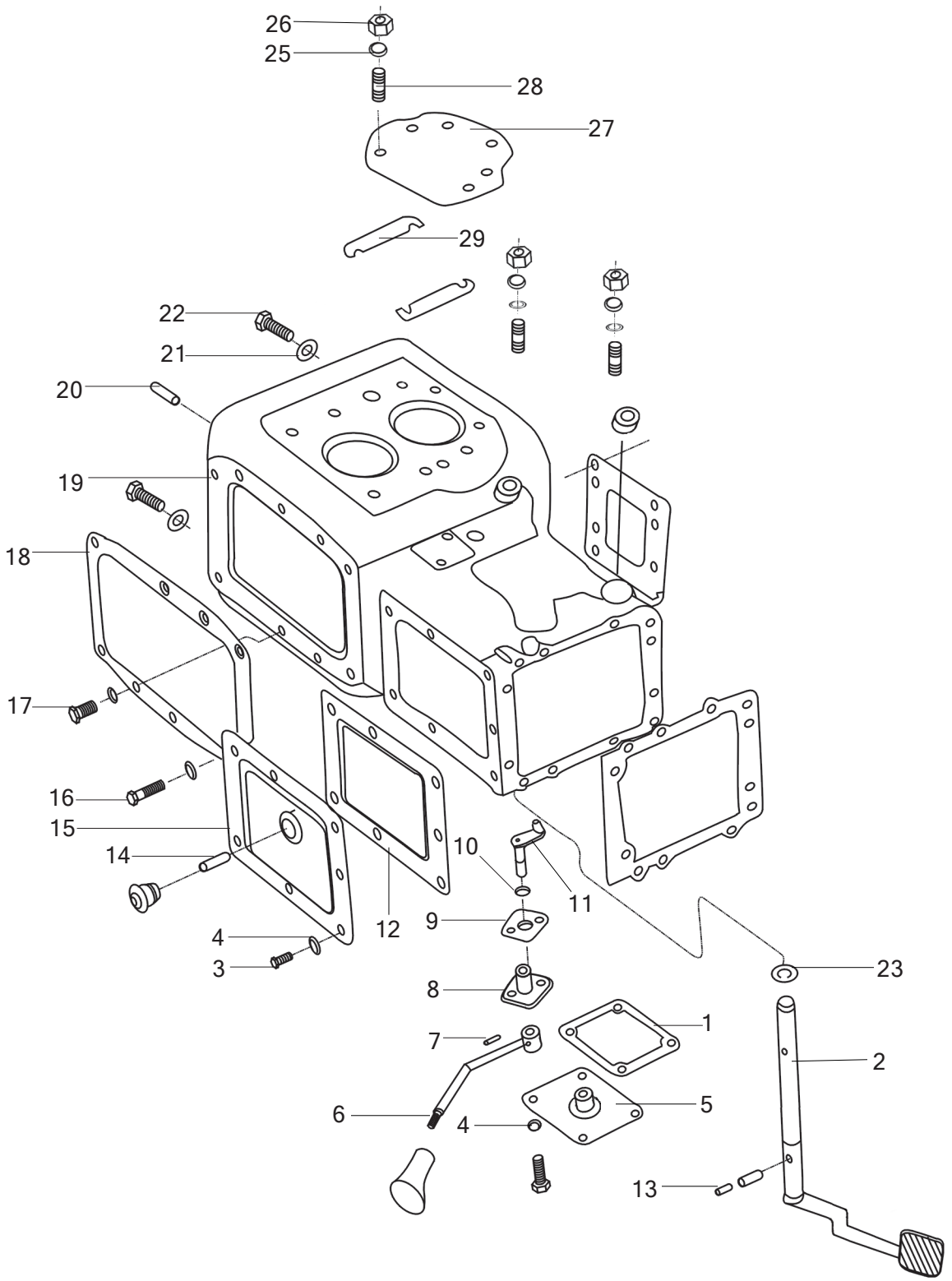

MUSA Part Number	Ref.	Description of Part	Unit Quantity	Remarks/ Service Bulletin No.
9380108AAA	1	Gasket	1	
9381020BBS	2	Lever	1	
G578386M1020	3	Screw	9	
G938710	4	Washer	21	
9381050BBS	5	Cover	1	
9380081BBA	6	Rod	1	
G87986628	7	Pin	1	
9380111AAA	8	Sleeve	1	
9380109AAA	9	Gasket	1	
G1235761524F	10	Seal	1	
9380110BBA	11	Pin	2	
9380103AAA	12	Gasket	1	
G87986540	13	Pin	2	
9380050AAA	14	Dipstick	1	
9380040AAA	15	Cover	1	
G578286M1070	16	Screw	1	
G578286M1045	17	Screw	7	
9380105AAA	18	Gasket	1	
9381102BBS01	19	Housing	1	
9380115AAA	20	Pin	2	
710011M2015	21	Washer	2	
9380120AAD	22	Screw	1	
G978520	23	Washer	2	
G978512	24	Washer	8	
G938712	25	Washer	20	
G617086M12	26	Nut	20	
9380106AAA	27	Gasket	2	
G89888AM123088	28	Stud	12	
9380107BAB	29	Shims	8	

Rear axle Housing and Levers

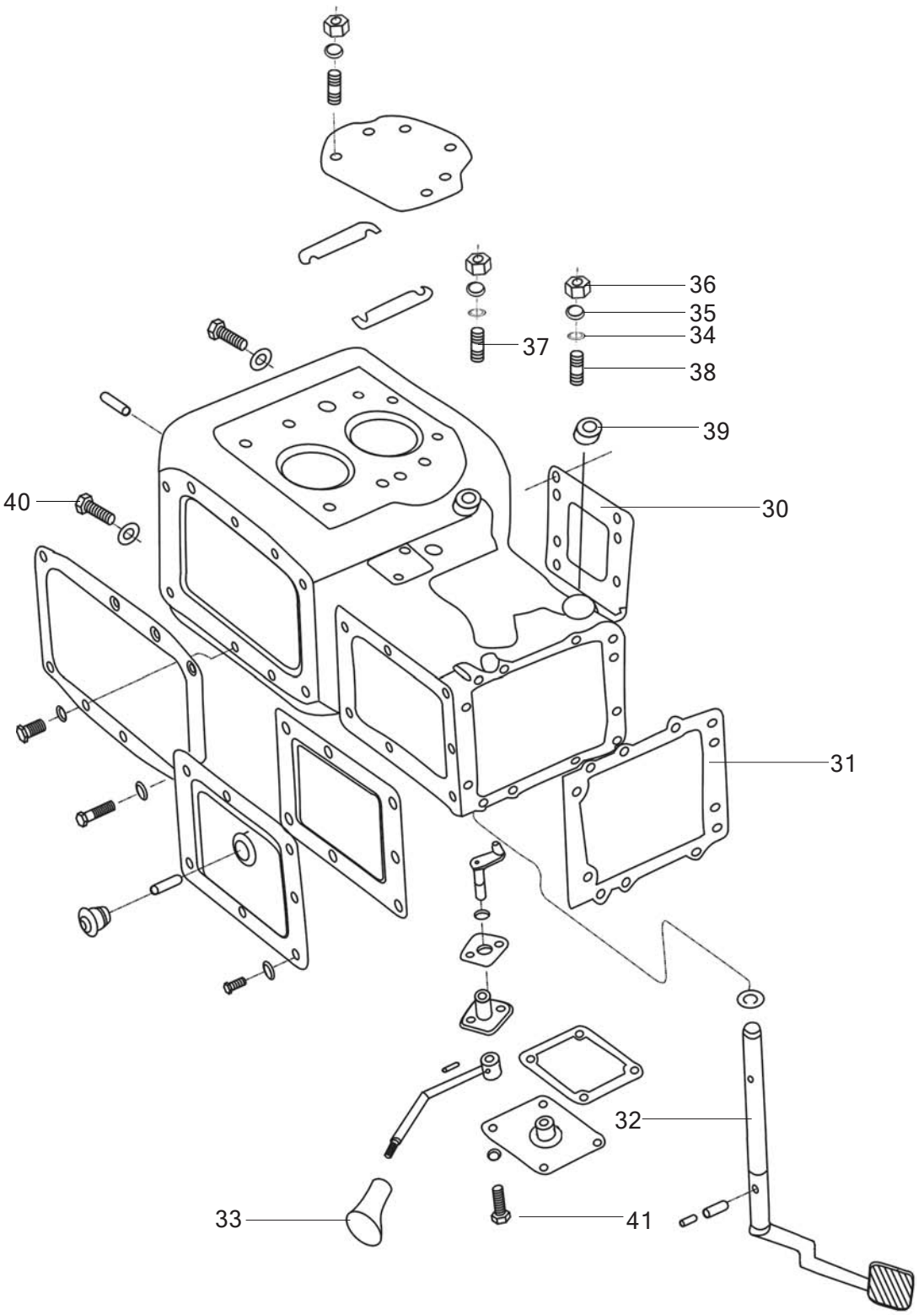

MUSA Part Number	Ref.	Description of Part	Unit Quantity	Remarks/ Service Bulletin No.
9381101ABA	30	Gasket	1	
9380102AAA	31	Gasket	1	
G87986840	32	Pin	2	
9380813BBA	33	Handle	1	
G978512	34	Washer	8	
G938712	35	Washer	8	
G617086M12	36	Nut	8	
G89888AM1211088	37	Stud	4	
G89888AM1216088	38	Stud	2	
9380113AD01	39	Bush	1	
710006M2015	40	Stud	1	
G578386M1025	41	Screw	4	

Differential Gears and Shaft

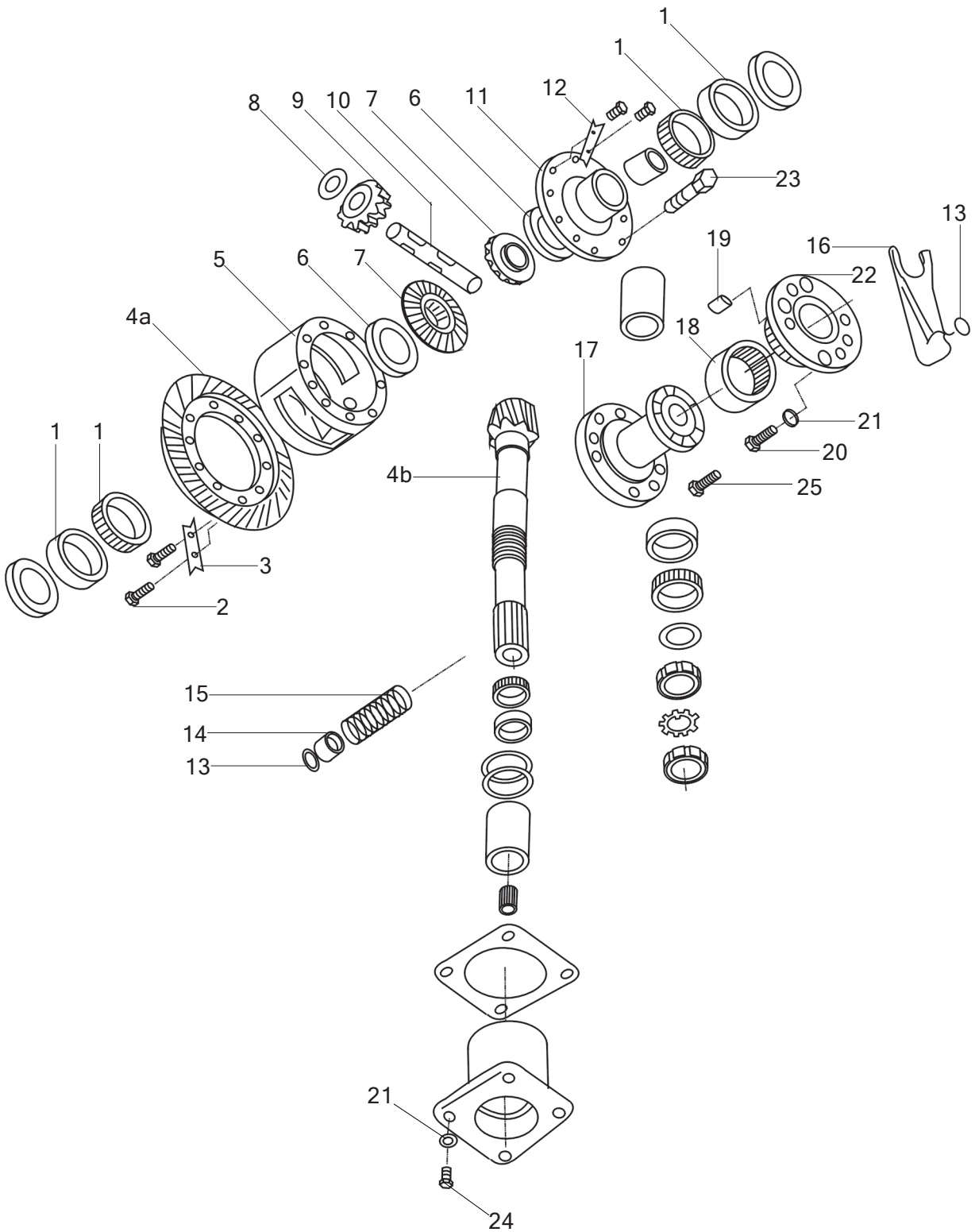

MUSA Part Number	Ref.	Description of Part	Unit Quantity	Remarks/ Service Bulletin No.
G2978420007111	1	Bearing	2	
G578386M1215252	2	Screw	10	
9380212AAA	3	Washer	5	
	4	Duble Gear Consists of:	1	
9380203BAB	4a	→ Gear	1	
9380301BAB	4b	→ Gear	1	
9380201BAB	5	Housing	1	
9380208AAA	6	Washer	2	
9380205AAA	7	Gear	2	
9380207AAA	8	Washer	2	
9380204AAA	9	Gear	2	
9380206AAA	10	Shaft	1	
9380202BAB	11	Cover	1	
9380210AAA	12	Washer	5	
G1235762024	13	Seal	2	
9381103ABA	14	Seat	1	
9381104ABA	15	Spring	1	
9381105ABA	16	Fork	1	
9381107ABA	17	Plate	1	
9381106ABA	18	Coupler	1	
G11986A1620	19	Pin	4	
G578386M1225	20	Screw	6	
G938712	21	Washer	16	
9381030ABA	22	Flange	1	
9380211AAA	23	Screw	1	
G578386M1235	24	Screw	4	
G578386M1230	25	Screw	6	

Differential Gears and Shaft

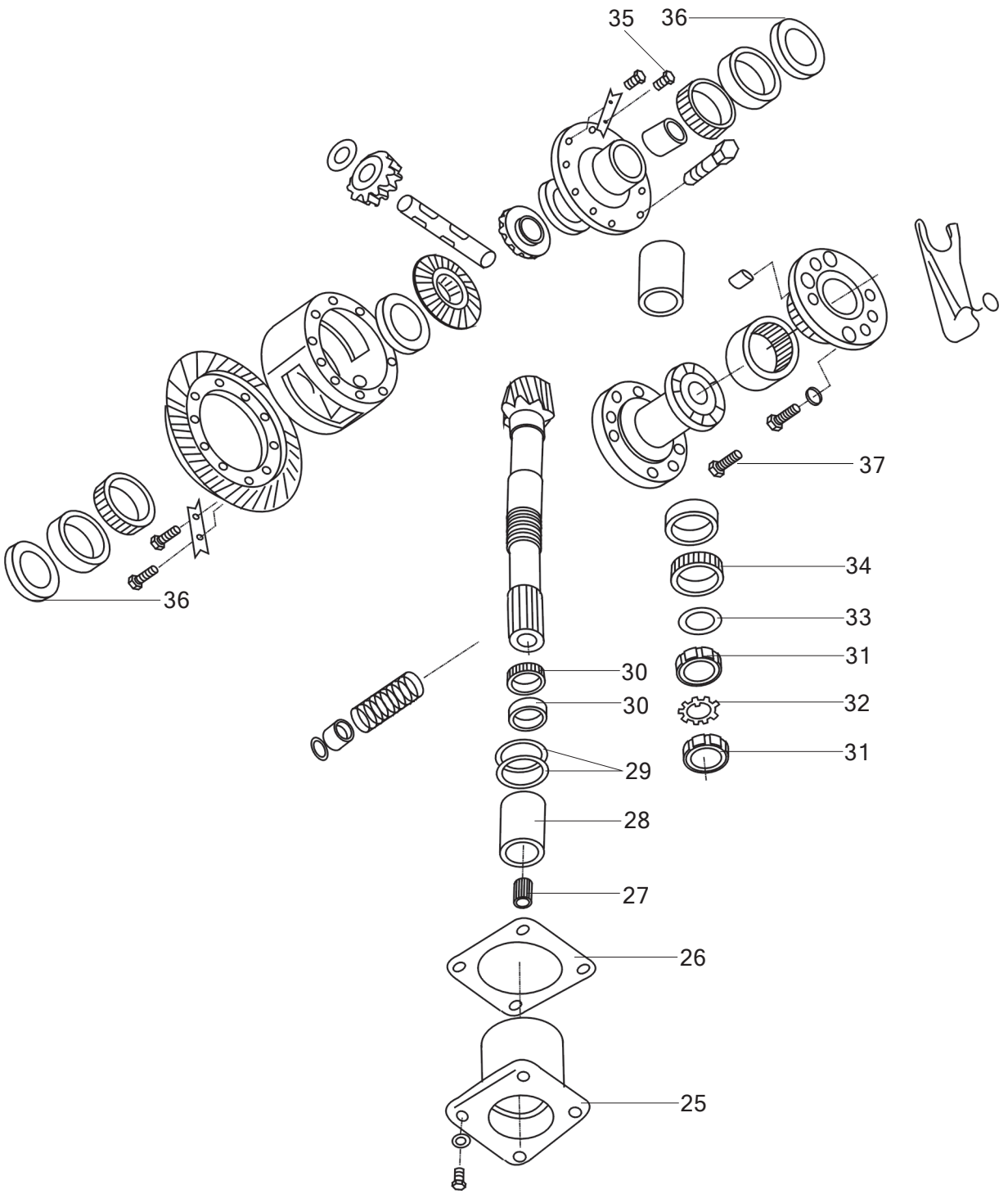

MUSA Part Number	Ref.	Description of Part	Unit Quantity	Remarks/ Service Bulletin No.
9380302BAB	25	Carrier	1	
9380104AAA	26	Washer	1	
G580186924314	27	Bearing	1	
9380303BAB	28	Spacer	1	
9380306AAA	29	Shims	A.R	
G2978427307E	30	Bearing	1	
9380304AAA	31	Nut	2	
9380305AAA	32	Washer	1	
9380308AAA	33	Washer	1	
G297867507	34	Bearing	1	
G578386M1025109	35	Screw	9	
9380213BAB	36	Washer	2	
G578386M1230	37	Screw	6	

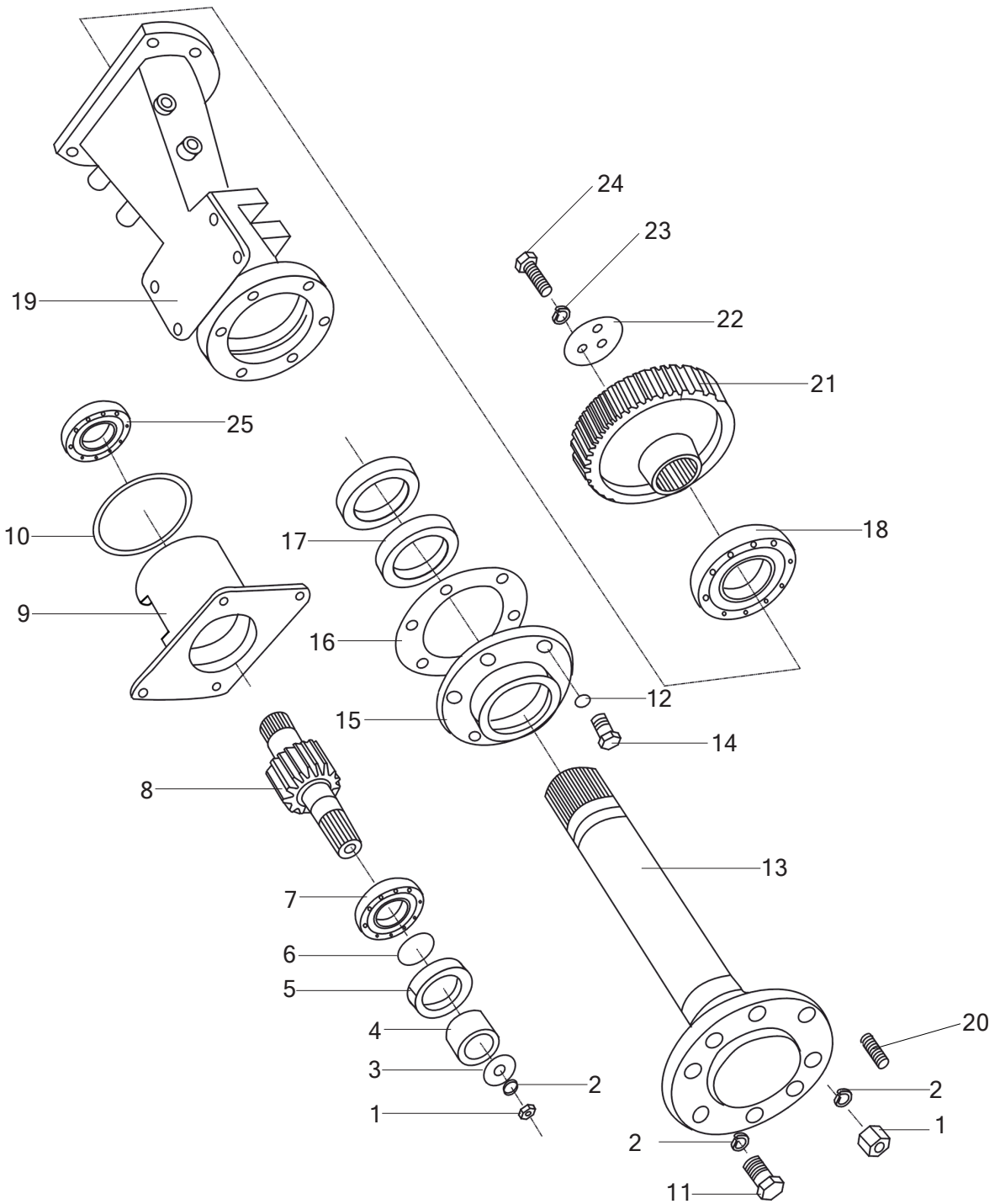
24
23
19
22
21
25
10
17
18
9
16
12
15
14
8
13
7
6
5
20
4
3
2
2
1
1
2
11

MUSA Part Number	Ref.	Description of Part	Unit Quantity	Remarks/ Service Bulletin No.
G617086M16	1	Nut	6	
G938716	2	Washer	18	
9390108BAB	3	Washer	2	
9390106AAA01	4	Sleeve	2	
G987798B507012F	5	Seal	2	
G1235763635F	6	Seal	2	
G27689307	7	Bearing	2	
9390104BAB01	8	Gear	2	
9390103BBS	9	Housing	2	
G12357611031F	10	Seal	12	
G578386M1635	11	Screw	12	
G938712	12	Washer	12	
9390102ABA	13	Shaft	12	
G578386M1235	14	Screw	12	
9390102AAA	15	Cover	2	
9390109AAA	16	Gasket	2	
G987788FB609012F	17	Seal	4	
G27689211	18	Bearing	4	
9390101BAA	19	Housing	2	
G89888M1630	20	Stud	4	
9390105BAB	21	Gear	2	
9390107AAA	22	Washer	2	
G93878	23	Washer	6	
G578386M820	24	Screw	6	
G27689110	25	Bearing	2	

MAHINDRA
TRACTORS

Brakes

Brakes

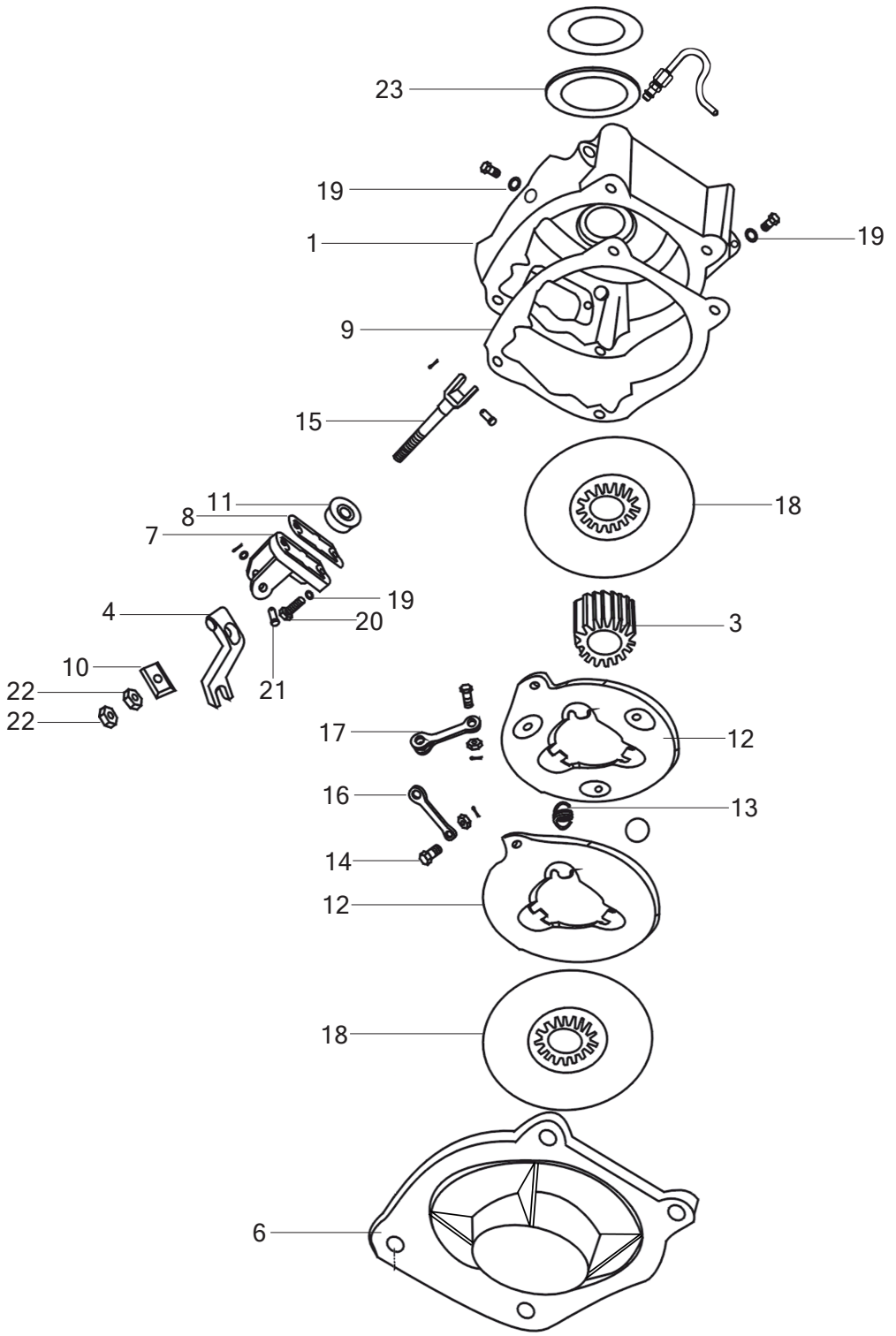
23
19
1
19
9
15
18
11
8
7
19
4
20
3
10
22
21
22
17
12
16
13
14
12
18
6

MUSA Part Number	Ref.	Description of Part	Unit Quantity	Remarks/ Service Bulletin No.
9432050BBS03C	*	Brake assembly(R)	1	
9432040BBS03C	*	Brake assembly(L)	1	
9432501BBS04C	1	Housing(R)	1	
9432401BBS04C	2	Housing(L)	1	
9430127BBS04C	3	Spacer	2	
9430150BBS01	4	Rocker(R)	1	
9430151BBS01	5	Rocker(L)	1	
9432402BBS04C	6a	Cover(L)	1	
9432502BBS04C	6b	Cover(R)	1	
9432403BBS	7	Rocker seat	2	
9432404BBS	8	Gasket	2	
9432405BBS	9	Gasket	2	
9432406BBS	10	Pad	2	
9432041BBS	11	Rubber shield	2	
9432421BBS	12	Plate	4	
9432422BBS	13	Spring	6	
9432423BBS	14	Screw	4	
9432424BBS	15	Lever	2	
9432425BBS	16	Plate	2	
9432426BBS	17	Plate Assy	2	
9432043BBS02C	18	Disc Assy	4	
G938710	19	Spring washer	6	
G578386M1028	20	Screw	4	
G88286B1268	21	Pin	2	
G617000M12	22	Nut	4	
G987788B507012F	23	Seal	2	

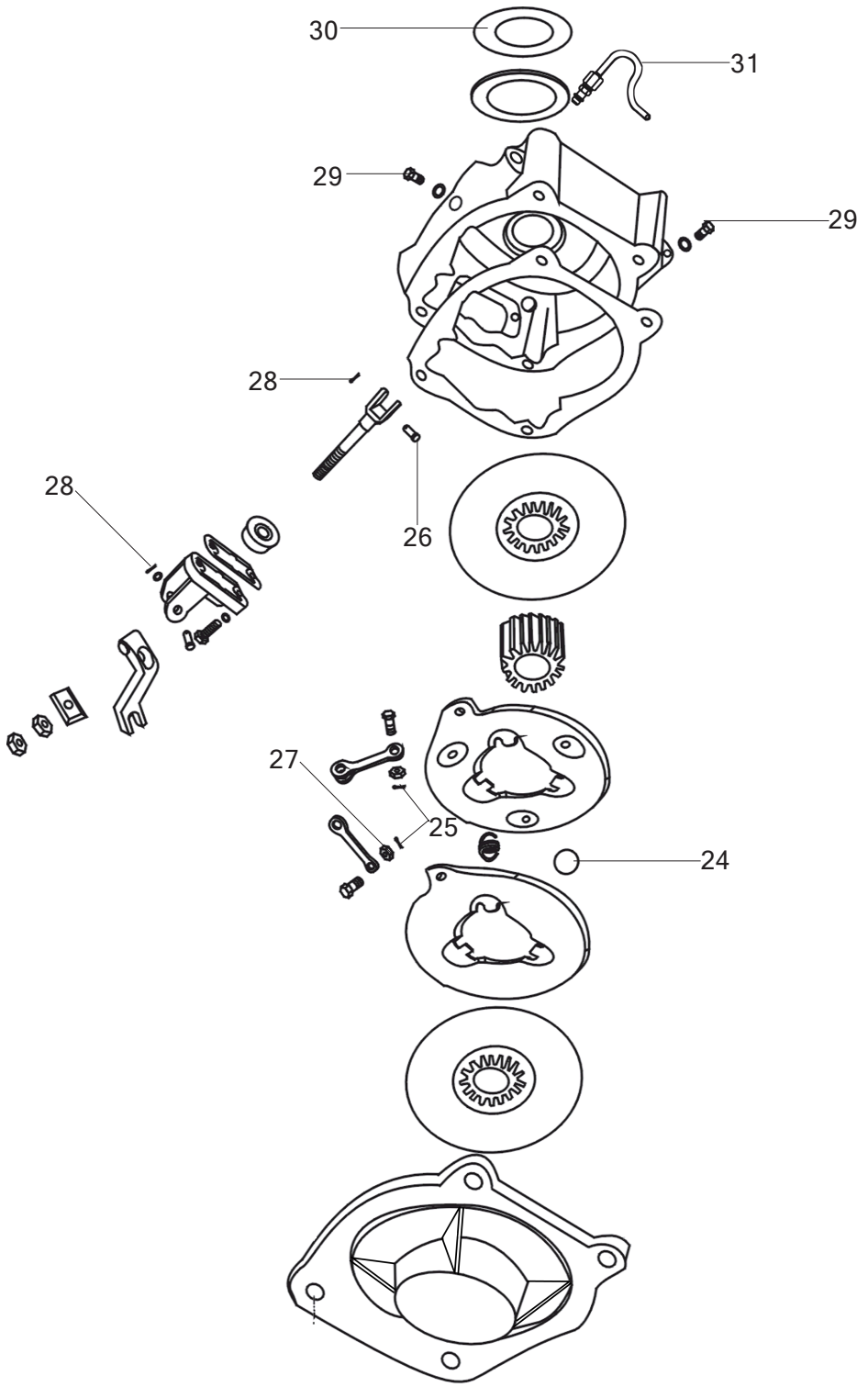
30
31
29
29
28
28
26
27
25
24

MUSA Part Number	Ref.	Description of Part	Unit Quantity	Remarks/ Service Bulletin No.
G3088978CN	24	Ball	6	
G91862520	25	Pin	4	
G88286B1235	26	Pin	4	
G959488M8	27	Nut	4	
G9186420	28	Pin	4	
G578386M1020	29	Screw	4	
G8938570	30	Circlip	2	
9432045BBS	31	Air pipe	1	

Brake Pedal and Solid Linkages

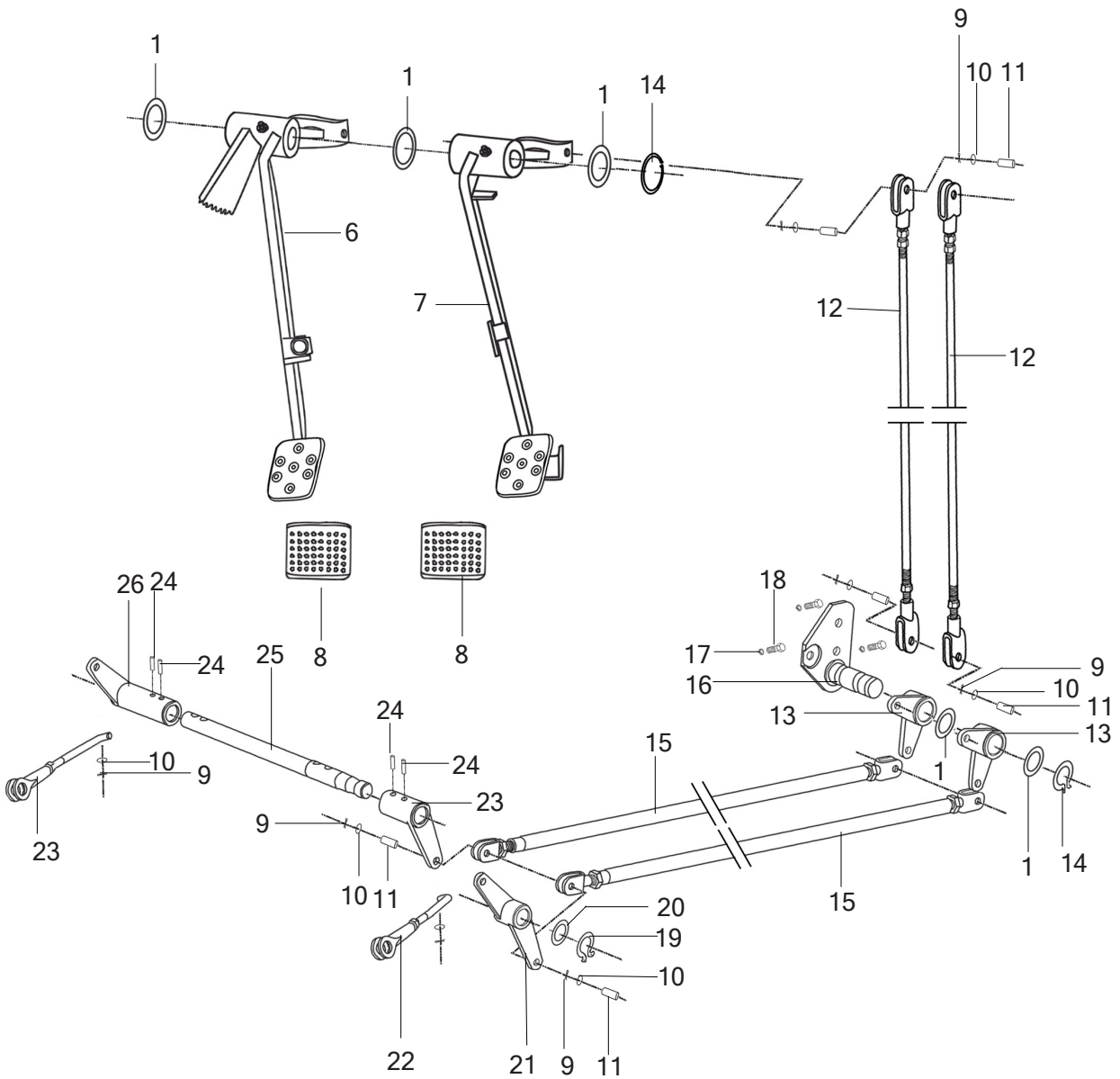

MUSA Part Number	Ref.	Description of Part	Unit Quantity	Remarks/ Service Bulletin No.
9430125BBB	1	Washer	6	
9430030BBS04C	6	Left step lever assembly	1	
9430040BBS02	7	Right step lever assembly	1	
9210110BBB	8	Rubber cover	2	
G91863230	9	Pin	6	
G978510	10	Washer	10	
G88286B1028	11	Pin	12	
9433050BBS	12	Brake transit draw lever assembly	2	
9432090BBS02	13	Brake transit arm CPTE	2	
G8948630	14	Circlip	2	
9432060BBS	15	Brake handspike assembly	2	
9433060BBS	16	Brake transit support assy	1	
G938712	17	Washer	3	
G578386M1245	18	Screw	3	
G8948624	19	Circlip	1	
G978524	20	Washer	1	
9433020BBS02	21	Right brake arm CPTE	1	
9432080BBS02	22	Right brake draw lever assembly	2	
9433040BBS01	23	Left brake arm CPTE	1	
G87986835	24	Pin	4	
9430104BBS01	25	Brake transit shaft	1	
9433030BBS02	26	Left brake driven arm CPTE	1	

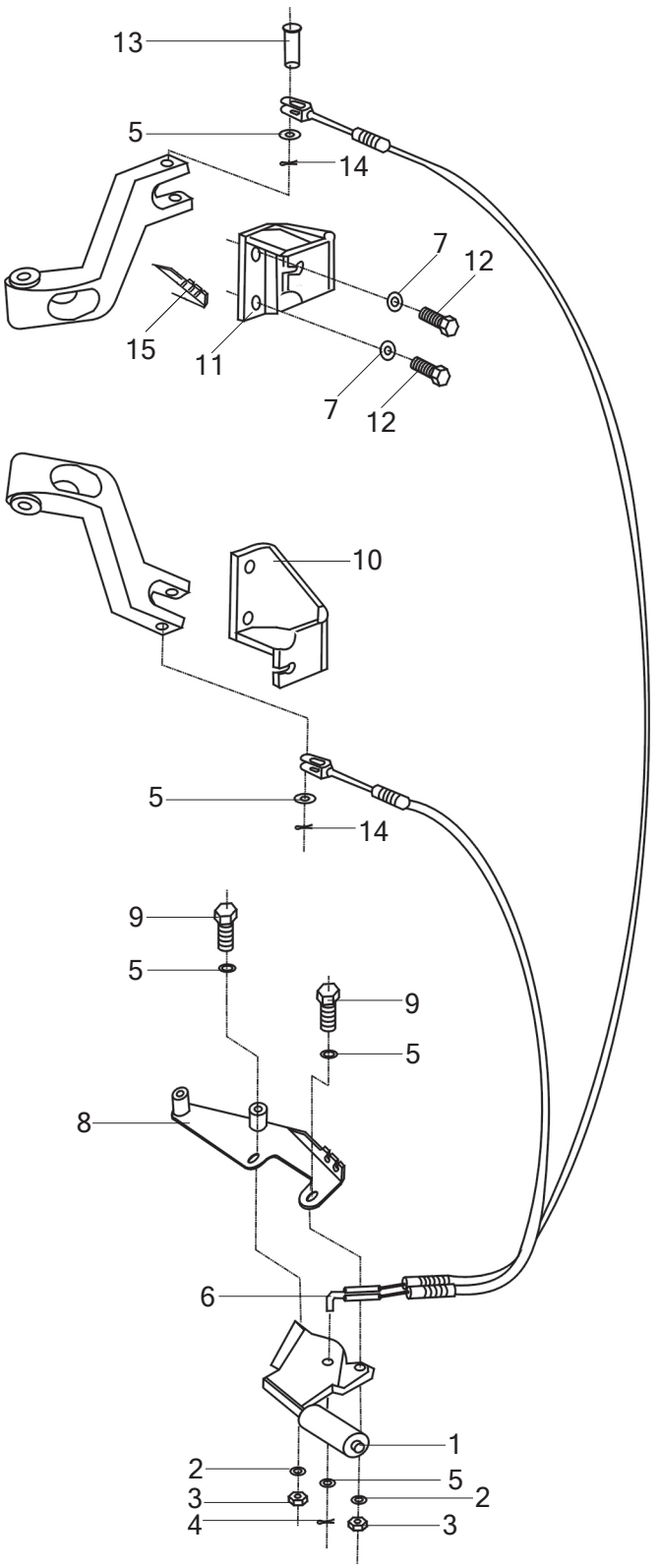
13
5
14
7
12
15
11
7
12
10
5
14
9
5
9
5
8
6
1
2
5
3
2
4
3

MUSA Part Number	Ref.	Description of Part	Unit Quantity	Remarks/ Service Bulletin No.
9431030CBB	1	Parking Brake Control	1	
G938710	2	Washer	2	
G617186M10	3	Nut	2	
G91862525	4	Pin	1	
G978510	5	Washer	5	
9431070BBA	6	Cable	1	
G938712	7	Washer	4	
9431050FBB	8	Bracket	2	
G578386M1025	9	Bolt	2	
9432020CBB	10	Cable bracket (R)	1	
9432030CBB	11	Cable bracket (L)	1	
G578386M1225	12	Bolt	4	
G88286B1055	13	Shaft	2	
G91863230	14	Pin	2	
9480110AAA	15	Nylon strip	2	

MAHINDRA
TRACTORS

Wheels and Tires

Wheels and Tires

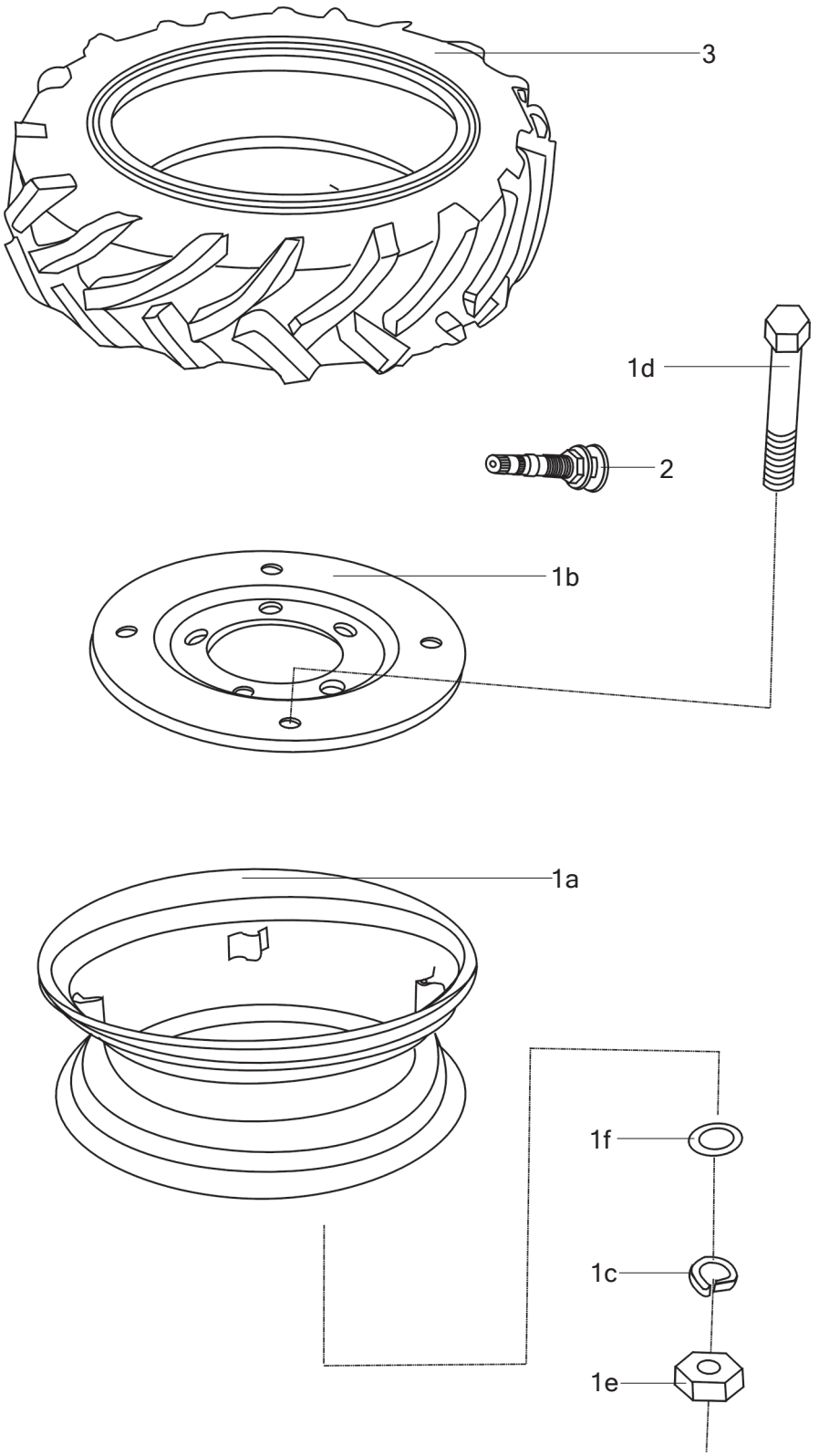
3
1d
2
1b
1a
1f
1c
1e

MUSA Part Number	Ref.	Description of Part	Unit Quantity	Remarks/ Service Bulletin No.
9320020BBB	1	Rim assembly Consists of:	2	
9320021BBB	1a	→ Rim	2	
9320201BBB	1b	→ Disk	2	
G938714	1c	→ Washer	8	
G578586M141580	1d	→ Bolt	8	
G617186M1415	1e	→ Nut	8	
G978514	1f	→ Washer	8	
9320101BBB	2	Tube Valve	2	
G2979912785015	3	Tyre	2	

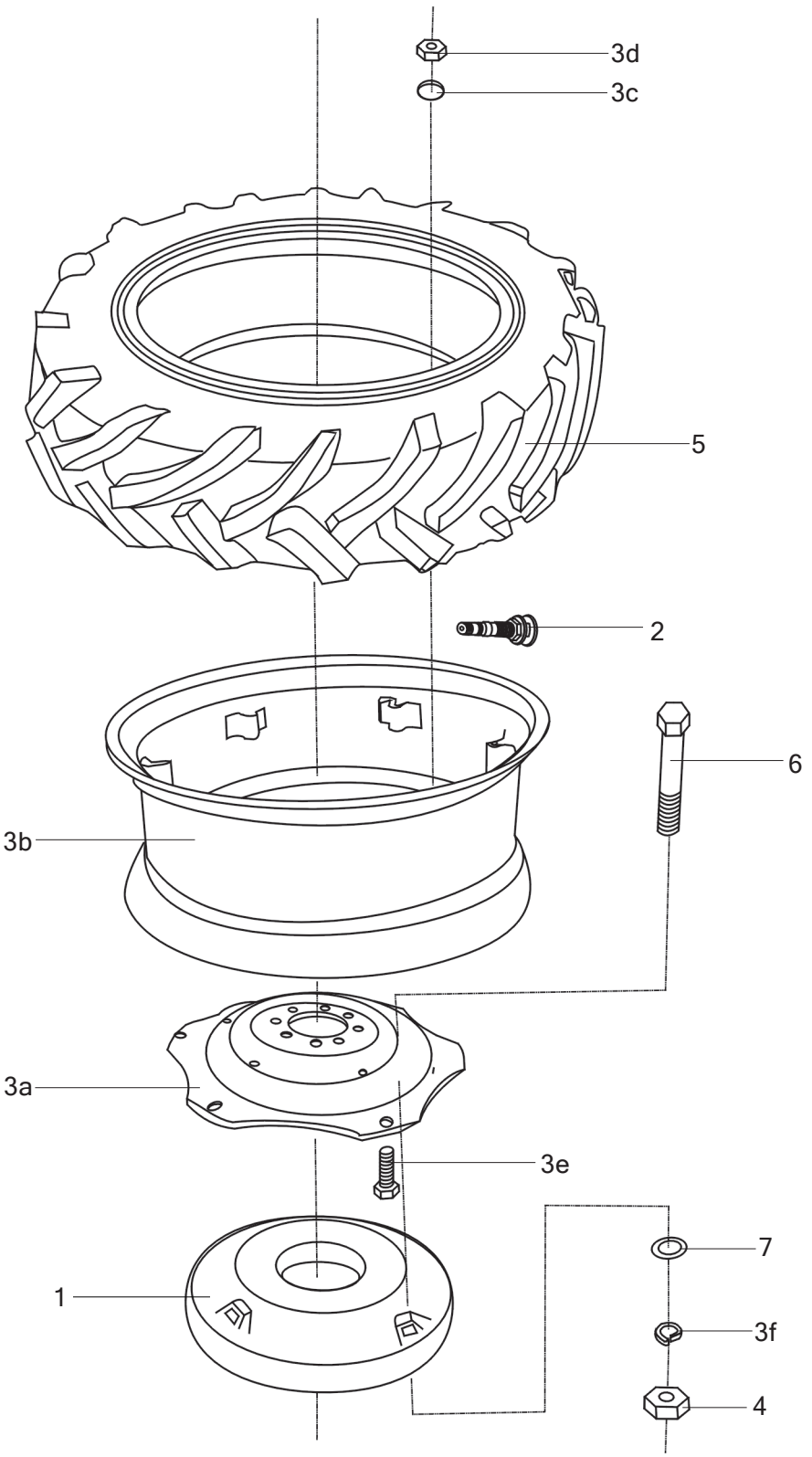
3d
3c
5
2
6
3b
3a
3e
7
1
3f
4

MUSA Part Number	Ref.	Description of Part	Unit Quantity	Remarks/ Service Bulletin No.
9750101BBB	1	Rear Weights	2	
9340101BBB	2	Tube Valve	2	
9340020FBB	3	Rim Assy Consists of:	1	
9340201BCN	3a	→ Disc	1	
9340021BBB	3b	→ Rim	2	
G978516	3c	→ Washer	8	
G617186M1615	3d	→ Nut	8	
9340202BAD	3e	→ Screw	8	
G938716	3f	→ Washer	8	
G617088M16	4	Nut	8	
11.2-24G82-2979	5	Rear Tyre	1	
G578286M1660	6	Screw	8	
16G85-97.1	7	Washer	12	

MAHINDRA
TRACTORS

Seat & ROPS

Seat and ROPS

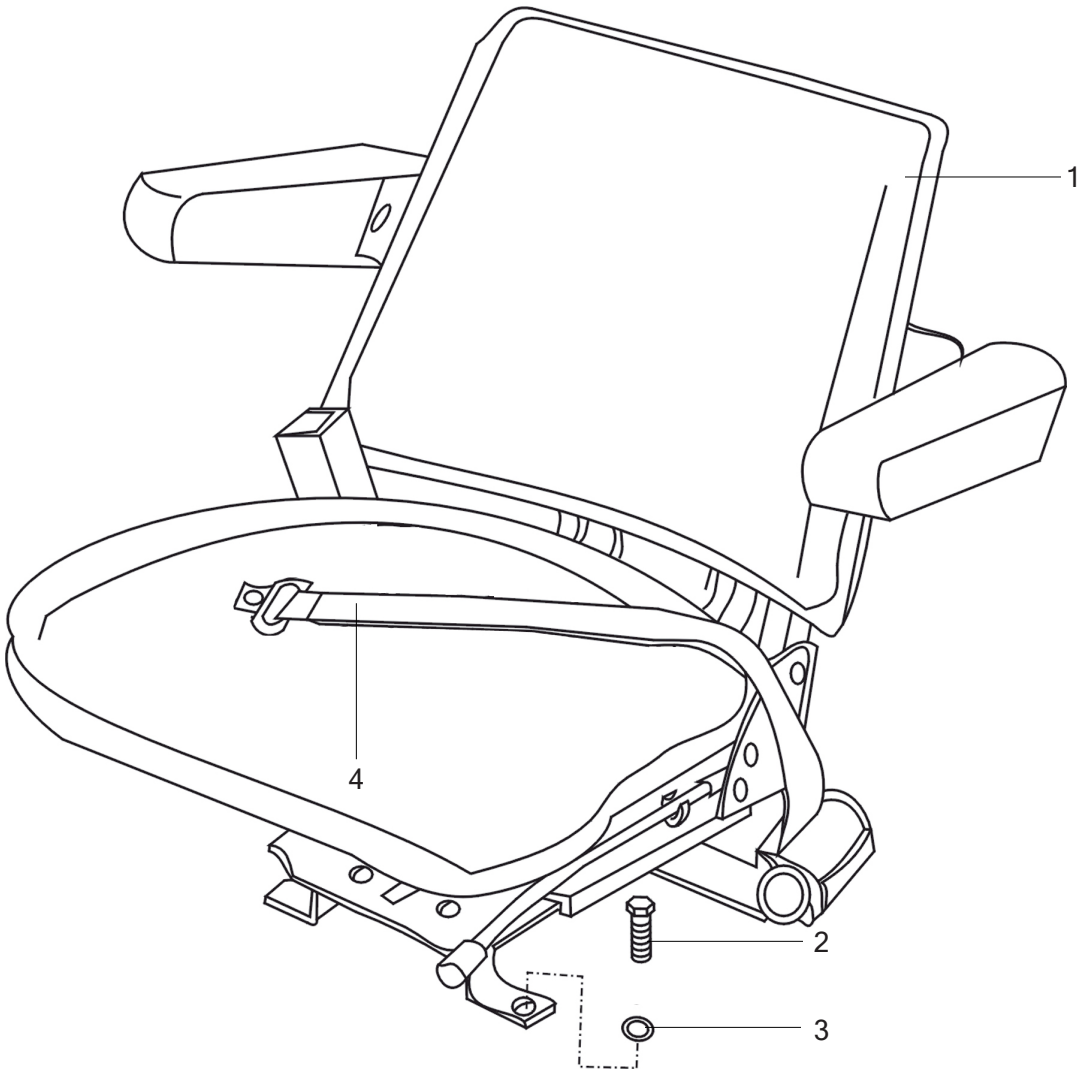
1
2
3
4

MUSA Part Number	Ref.	Description of Part	Unit Quantity	Remarks/ Service Bulletin No.
9440020FBB	1	Seat	1	
GB5783-86	2	Bolt	4	
GB93-87	3	Washer	4	
9440030FBB	4	Safety Belt Assy Consists of:	1	
‡	4a	→ Safety Belt	1	
‡	4b	→ Buckle	1	

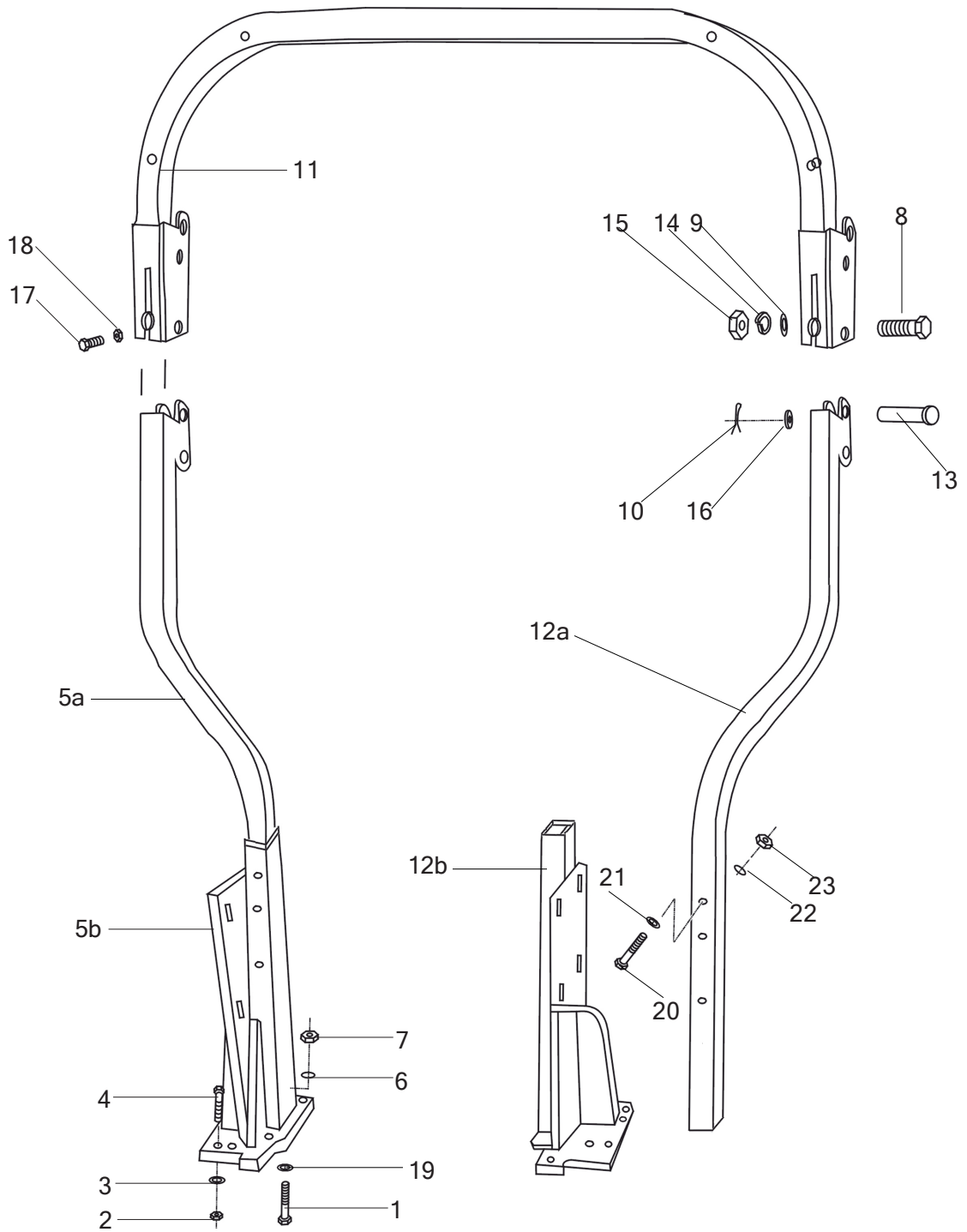
11
18
17
15
14
9
8
10
16
13
12a
5a
12b
21
23
22
5b
20
7
6
4
19
3
1
2

MUSA Part Number	Ref.	Description of Part	Unit Quantity	Remarks/ Service Bulletin No.
G578286M16200	1	Bolt	8	
G617086M12	2	Nut	4	
G938712	3	Washer	4	
G578286M1260	4	Bolt	4	
9461020FBB	5a	Safety Frame (R)	1	
9461060FBB	5b	Right bottom support	1	
G938716	6	Washer	8	
G617086M16	7	Nut	8	
G578286M24100	8	Bolt	2	
G978524	9	Washer	2	
9460102BBB	10	Pin	2	
9461040FBB	11	Top Safety Frame	1	
9461030FBB	12a	Safety Frame (L)	1	
9461050FBB	12b	Left bottom support	1	
G88286B2275	13	Pin	2	
G938724	14	Washer	2	
G617086M24	15	Nut	2	
9460109BBB	16	Gasket	2	
G578386M1035	17	Bolt	2	
G617086M10	18	Nut	2	
G978516	19	Washer	32	
M14x100-8.8G00	20	Bolt	4	
14G87-93	21	Washer	4	
14G02-97.1	22	Washer	4	
M14G00-6170	23	Nut	4	

MAHINDRA
TRACTORS

Sheet Metal
& Electrical System

Sheet Metal

Hood and Instrument Panel

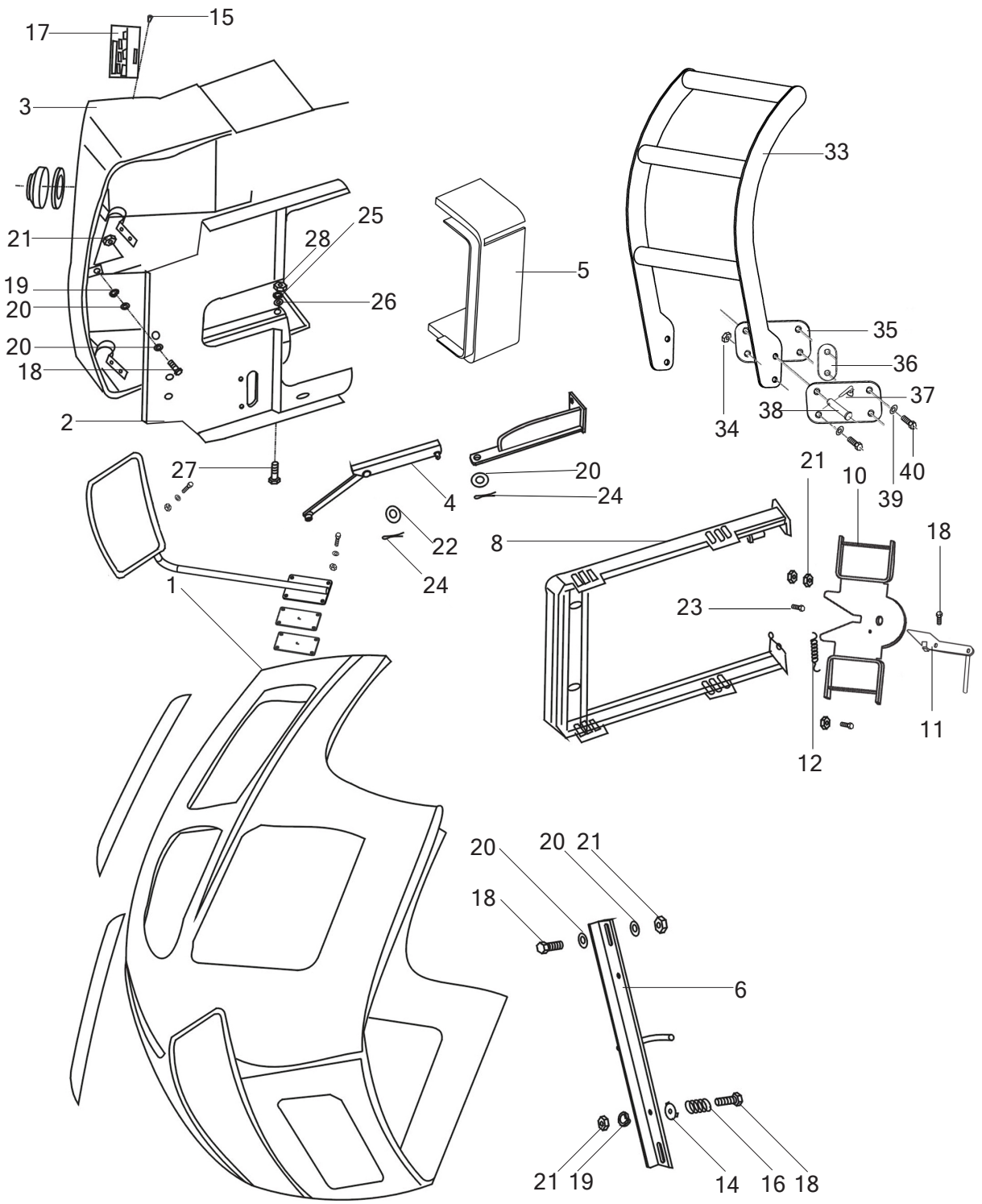

MUSA Part Number	Ref.	Description of Part	Unit Quantity	Remarks/ Service Bulletin No.
9471030FBB	1	Hood	1	
9471040BBS03	2	Bracket	1	
9471070FBB	3	Instrument Panel	1	
9471050BBS	4	Brace Assy.	1	
9471128BBS02	5	Instrument panel cover	1	
9471090BBS	6	Beam welded assembly	1	
9471020BBB04	8	Fuel Tank Bracket	1	
9474030BBS	10	Fixup board CPTE	1	
9474040BBS	11	Hood lock	1	
9471111BBQ	12	Spring	1	
9471124AAJ	14	Lock	2	
G1261890329	15	Rivet	4	
9471126AAJ01	16	Spring	2	
9500602BBS	17	Name Plate	1	
G578300M825	18	Bolt	14	
G93878	19	Washer	14	
G97028	20	Washer	12	
G617000M8	21	Nut	9	
G52871028	22	Washer	1	
G81885M512	23	Bolt	1	
G9100220	24	Pin	2	
G938710	25	Washer	4	
G970210	26	Washer	4	
G578300M1030	27	Bolt	4	
G617000M10	28	Nut	4	

Hood and Instrument Panel

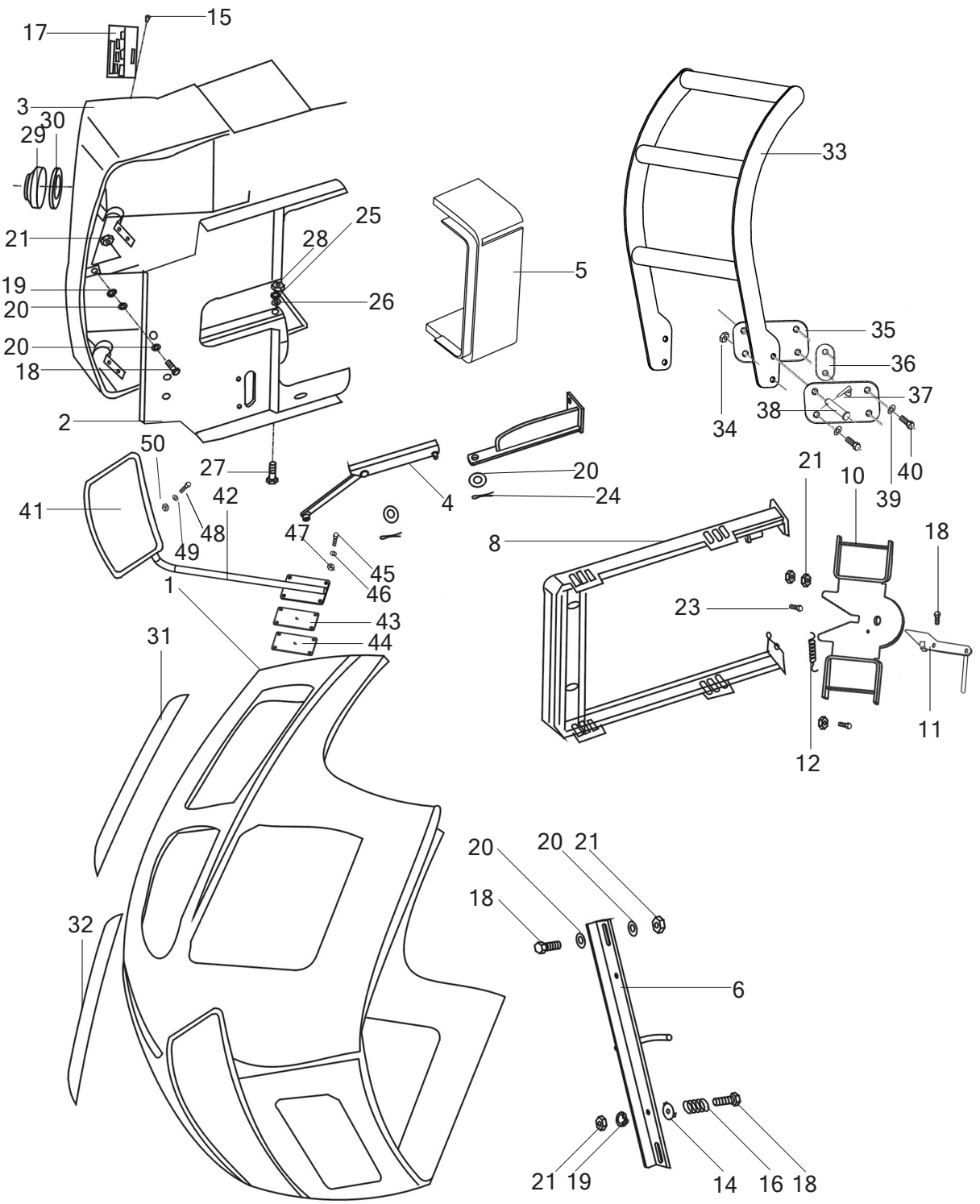

MUSA Part Number	Ref.	Description of Part	Unit Quantity	Remarks/ Service Bulletin No.
9500107AAA	29	Rubber Jacket	1	
9471121BBB01	30	Rubber Jacket	1	
9471101FBB	31	Decal(L)	1	
9471102FBB	32	Decal(R)	1	
9462020FBB	33	Front Protection Frame	1	
M12G00-889.1	34	Nut	2	
9462102FBB	35	Splint I	4	
9462101FBB	36	Splint II	2	
B12x32-8.8G00-882	37	Pin	4	
9560105AAA01	38	Pin	4	
12G87-93	39	Washer	6	
M12x45-8.8G00-5783	40	Bolt	6	
9474080FBB	41	Rear mirror	2	
9474090FBB	42	Bracket	2	
9474102FBB	43	Washer	1	
9474101FBB	44	Rubber mat	1	
M6x30G00-5783	45	Bolt	8	
6G87-93	46	Washer	8	
M6G00-6170	47	Nut	8	
M5x25G00-5783	48	Bolt	4	
5G87-93	49	Washer	4	
M5G00-6170	50	Nut	4	

Floor And Fenders

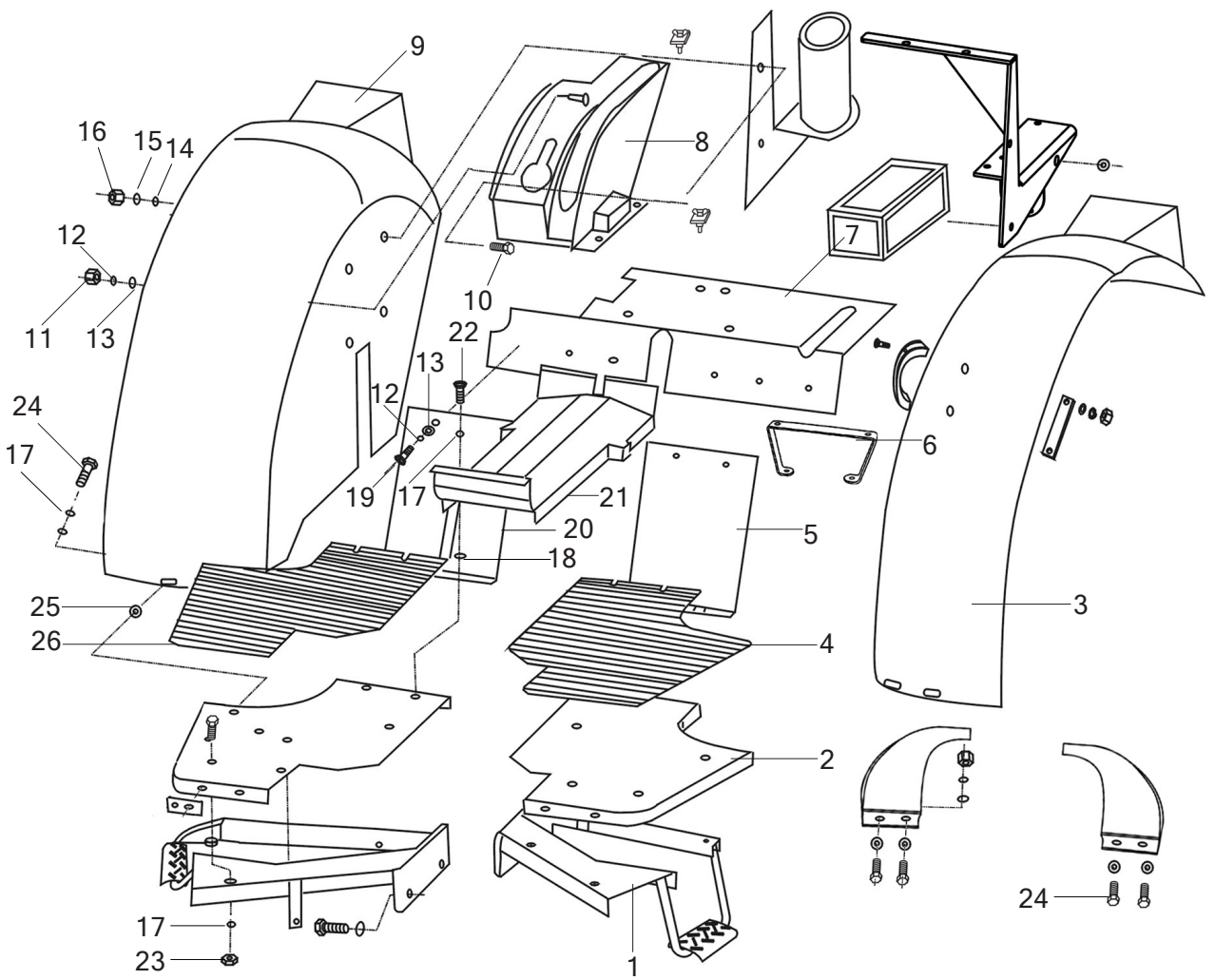

MUSA Part Number	Ref.	Description of Part	Unit Quantity	Remarks/ Service Bulletin No.
9472020BBB01	1	Floor support (L)	1	
9472050BBS	2	Floor(L)	1	
9472102FBB	3	Fender (L)	1	
9472101BBB01	4	Rug (L)	1	
9472109BBA01A	5	Connecting Plate (L)	1	
9472070FBB	6	Back Floor Support	1	
9472060FBB	7	Back Floor Plate	1	
9472111FBB	8	Handleb Cover	1	
9472101FBB	9	Fender(R)	1	
G578300M1030	10	Bolt	8	
G617000M6	11	Nut	3	
G93876	12	Washer	11	
G96026	13	Washer	14	
G960210	14	Washer	8	
G938710	15	Washer	8	
G617000M10	16	Nut	8	
G93878	17	Washer	16	
G97028	18	Washe	10	
G81800M620	19	Bolt	10	
9472108BBS02	20	Connecting plate (R)	1	
9472103BBB01	21	Cover	1	
G81800M830	22	Bolt	4	
G617000M8	23	Nut	14	
G578300M830	24	Bolt	10	
9472106BBA	25	Rubber washer	4	
9472102BBB01	26	Mat	1	

Floor And Fenders

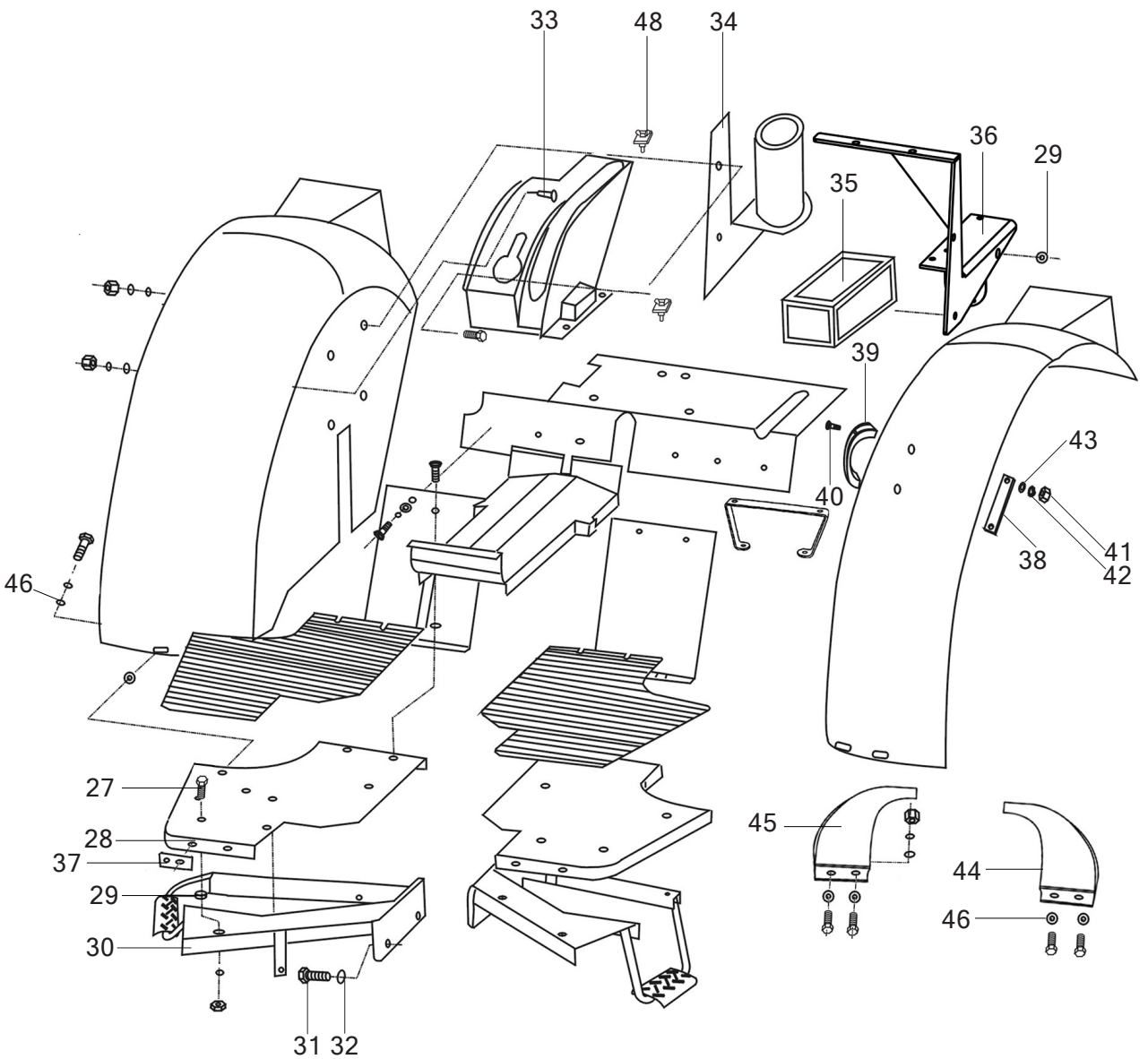

MUSA Part Number	Ref.	Description of Part	Unit Quantity	Remarks/ Service Bulletin No.
G1488M830	27	Bolt	8	
9472040BBS	28	Floor (R)	1	
9472103BBA	29	Damper	16	
9472030BBB01	30	Floor Support (R)	1	
G578300M1230	31	Bolt	6	
G938712	32	Washer	6	
G81800M630	33	Bolt	1	
9472090BBS	34	Support	1	
9473010BBB	35	Tool box	1	
9473020FBB	36	Support	1	
9480111AAA	37	Cable clamp	1	
9472104BBB	38	Cable plate	2	
9472109BBB	39	Handrail	2	
G81800M530	40	Bolt	4	
G617000M5	41	Nut	4	
G93875	42	Washer	4	
G97855	43	Washer	4	
9472503BBB01	44	Heat sheild (L)	1	
9472504BBB01	45	Heat sheild (R)	1	
G96028	46	Washer	8	
G14M830	47	Bolt	4	
9552050BBS	48	Fix Plate	2	

Fuel Tank

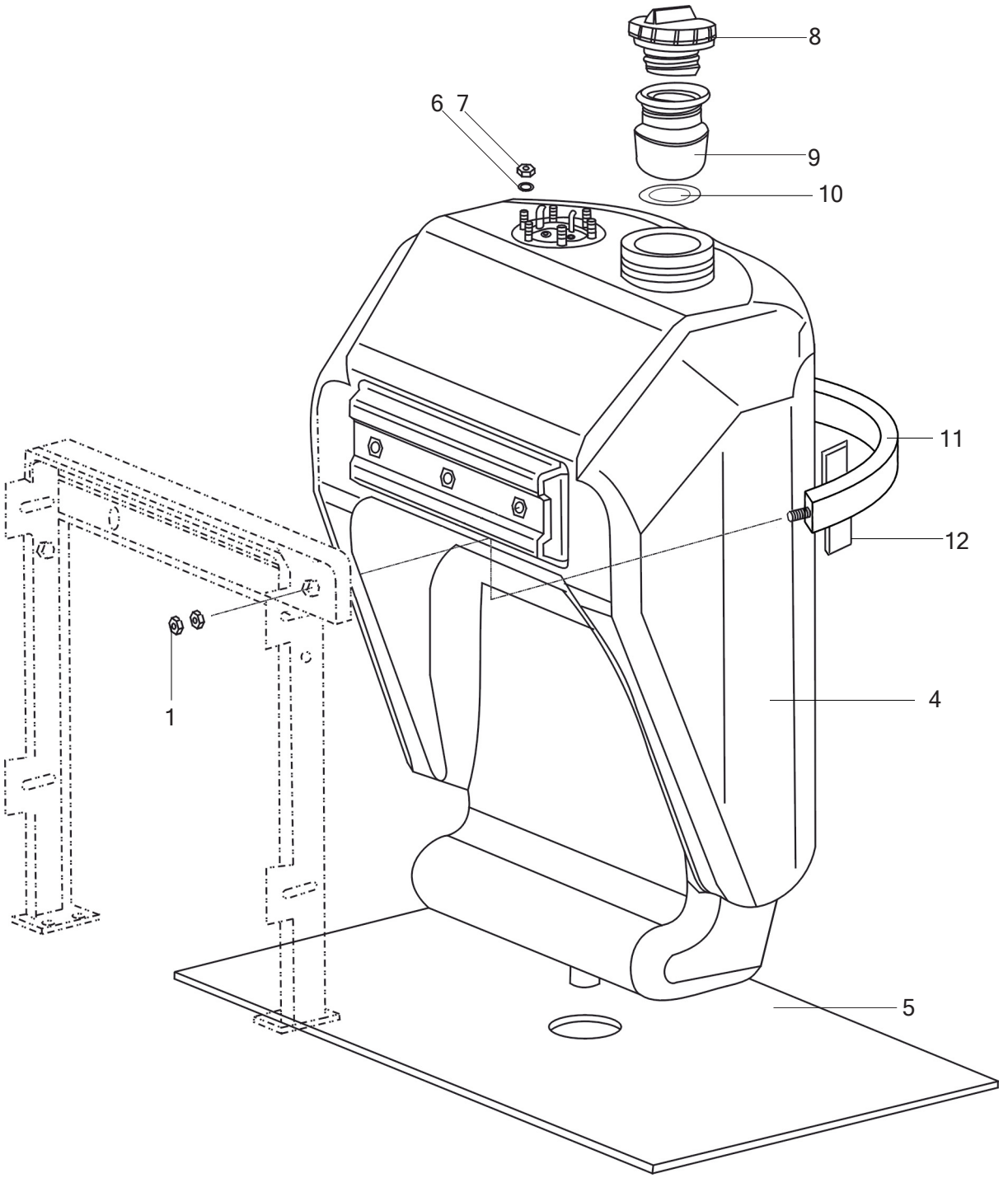

MUSA Part Number	Ref.	Description of Part	Unit Quantity	Remarks/ Service Bulletin No.
G617000M6	1	Nut	4	
9500020BBA02D	4	Fuel Tank	1	
9500101BBA02	5	Rubber Cushion	1	
G93875	6	Washer	6	
G617000M5	7	Nut	6	
9500040AAD01	8	Fuel tank cover	1	
9500040BBA	9	Connecting pipe assembly	1	
9500103BBS	10	Rubber washer	1	
9500050BBS	11	Belt	1	
9500104BBS01A	12	Gasket	1	

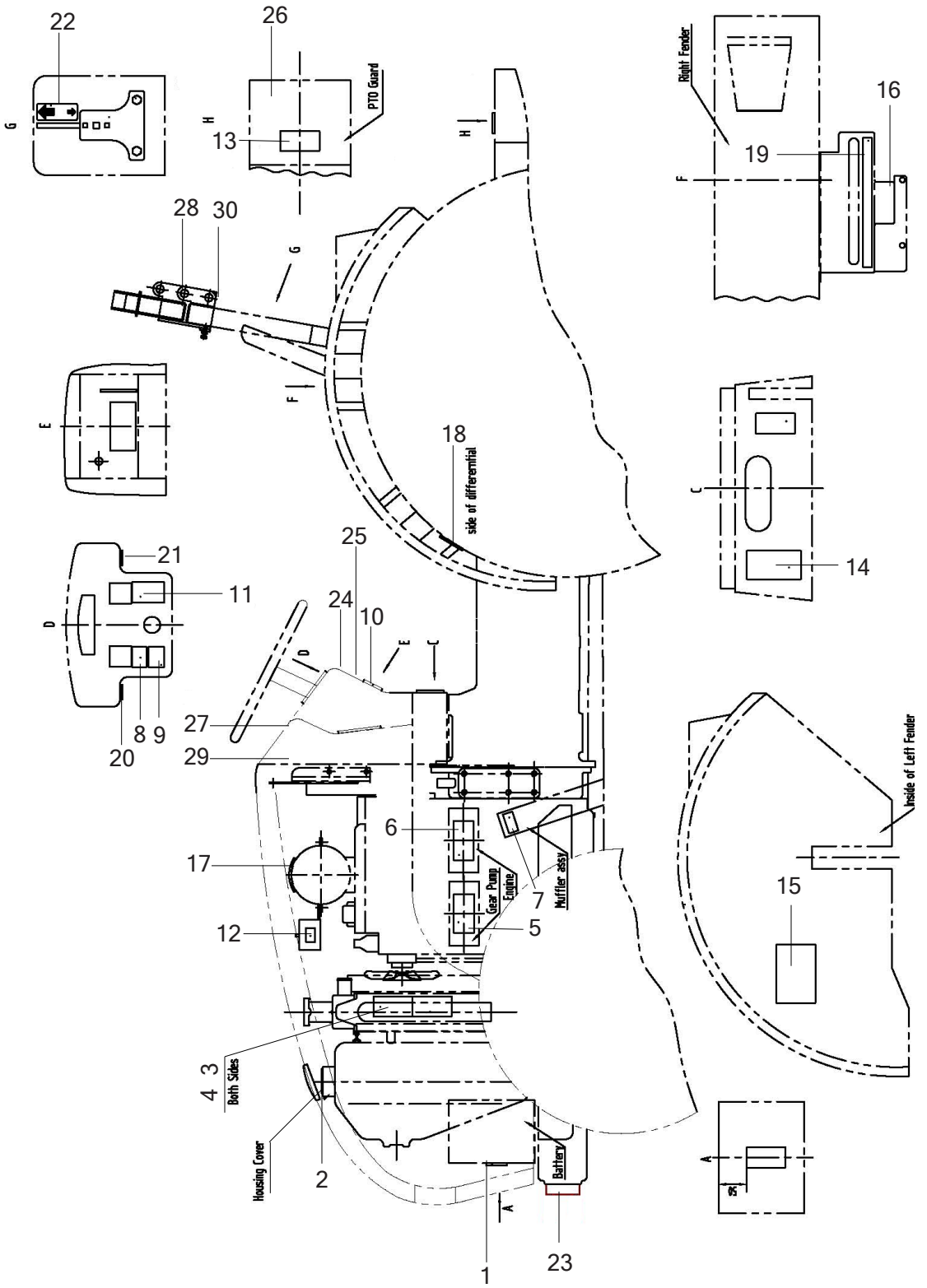
22
26
PTO Guard
13
Right Fender
16
19
28
30
18
side of differential
25
21
11
24
10
14
27
8
9
20
29
Inside of Left Fender
6
17
Gear Pump
Engine
7
Muffler assy
15
12
5
4
3
Both Sides
Housing Cover
2
Battery
1
23

MUSA Part Number	Ref.	Description of Part	Unit Quantity	Remarks/ Service Bulletin No.
9463109BBS	1	Warning mark nine	1	
9463115BBS01	2	Warning mark fifteen	1	
9463101BBS	3	Warning mark one	2	
9463102BBS	4	Warning mark two	2	
9463108BBS	5	Warning mark eight	1	
9463105BBS01	6	Warning mark five	1	
9463106BBS	7	Warning mark six	1	
9463103BBS	8	Warning mark threee	1	
9463120BBS	9	Warning mark twenty	1	
9463107BBS	10	Warning mark seven	1	
9463113BBS	11	Warning mark thirteen	1	
9463104BBS	12	Warning mark four	1	
9463116BBS	13	Warning mark sixteen	1	
9463134FBB	14	Stick	1	
9463112BBS	15	Warning mark twelve	1	
9463133FBB	16	Hand brake stick	1	
9463117BBS	17	Warning mark seventeen	1	
9463111BBS	18	Warning mark eleven	1	
9463119BBS01	19	Warning mark nineteen	1	
9370157BBS	20	Decal II	1	
9370156BBS	21	Decal I	1	
9463121BBS	22	Warning mark twenty-one	1	
9463135BBS	23	Opening Hood mark	1	
9463141FBB	24	Warning mark twenty-two	1	
9463142FBB	25	Warning mark twenty-three	1	
9463143FBB	26	Warning mark twenty-four	1	
9463144FBB	27	Warning mark twenty-five	1	
9463145FBB	28	Warning mark twenty-six	1	
3.2x15G90-12618	29	Rivet3.2x15	4	
3.2x9G90-12618	30	Rivet3.2x19	4	

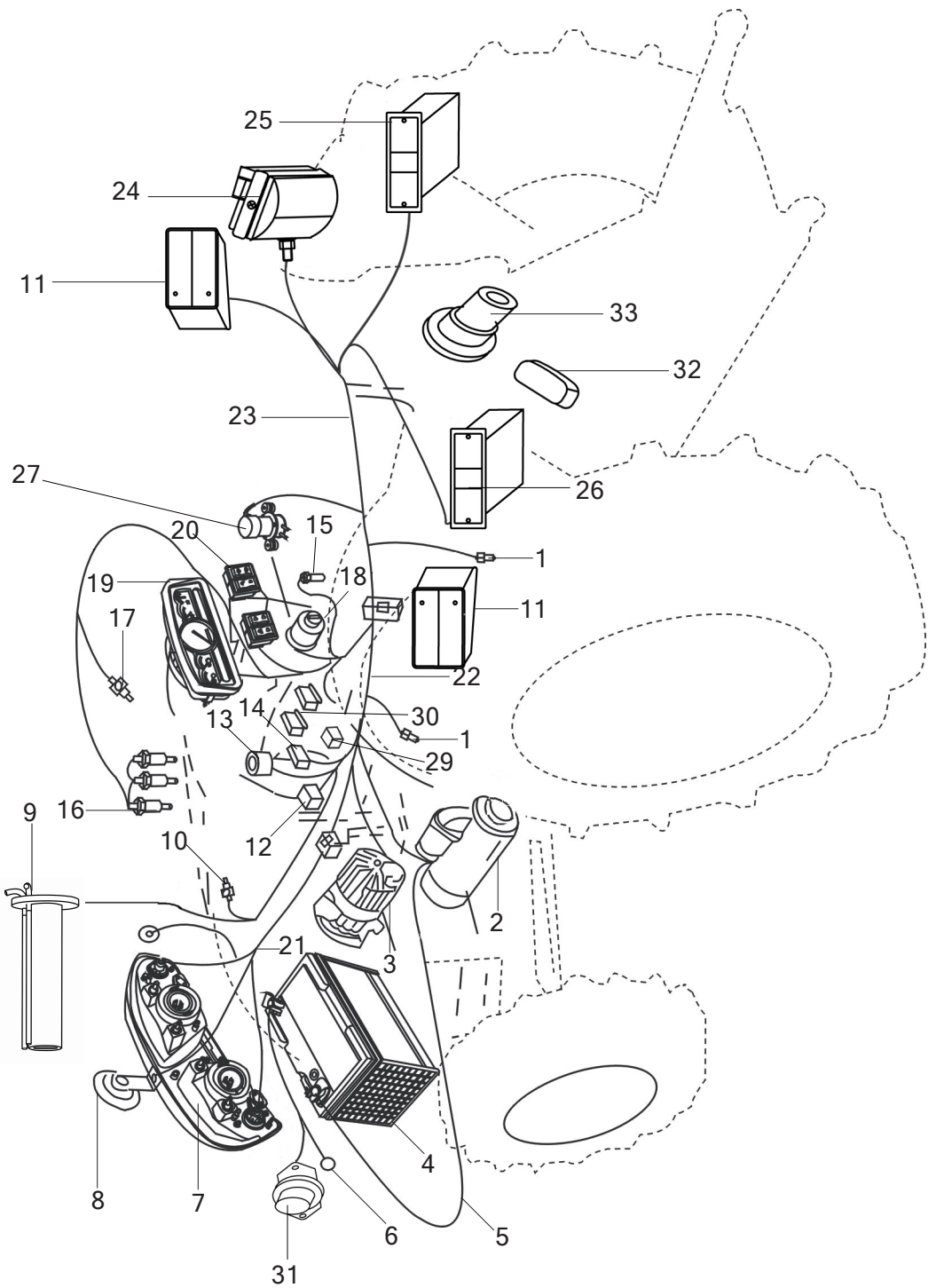
25
24
11
33
32
23
26
27
20
15
1
19
18
11
17
22
14
30
13
1
29
9
16
10
12
2
21
3
4
8
7
6
5
31

MUSA Part Number	Ref.	Description of Part	Unit Quantity	Remarks/ Service Bulletin No.
9480411BBS01	1	Neutral Switch	2	
3708100DAL	2	Starter	1	
3701100DAA01	3	Generator	1	
9480503BBS	4	Battery	1	
9480054BBS01	5	Cable-starter	1	
9480055BBS02	6	Cable-earth	1	
9480120FBB	7	Head Light	1	
9480601FBB	8	Horn	1	
9480090BBS	9	Fuel level Sensor	1	
9480106ABA	10	Water Temperature Sensor	1	
9480119FBBA	11	Front Position&Direction Lamp L/R	1/1	
9480414BBB	12	Fuse Box.	2	
9480404BBS	13	Flasher	1	
9480108AAA	14	Voltage Regulator	1	
9480113AAB	15	Brake Switch	1	
3770100DAA	16	Glow Plug	3	
9480107ABA	17	Oil Pressure Sensor	1	
9480408BBS	18	Starter Switch	1	
9480402FBB	19	Combiners Instrument	1	
9480043BBS	20a	Switch I	1	
9480044BBS	20b	Switch II	1	
9480061FBB	21	Hood Cable	1	
9480021FBB	22	Front Cable	1	
9480022FBB	23	Back Cable	1	
9480103BBS	24	Rear work light	1	
9480117FBB	25	Lamp L	1	
9480118FBB	26	Lamp R	1	
9480122BBB	27	Electronic Pump	1	
9480138BBS	28	Start relay	2	
9480417BBS	29	Time relay	1	
9480419FBB	30	Relay	1	
9480150BBB	31	Electrical Switch	1	
9480156FBB	32	Registration Plate Light	1	
9480153FBB	33	Seven-line Socket	1	

MAHINDRA
TRACTORS

Hyd. & 3
Point Linkage

Hydraulics

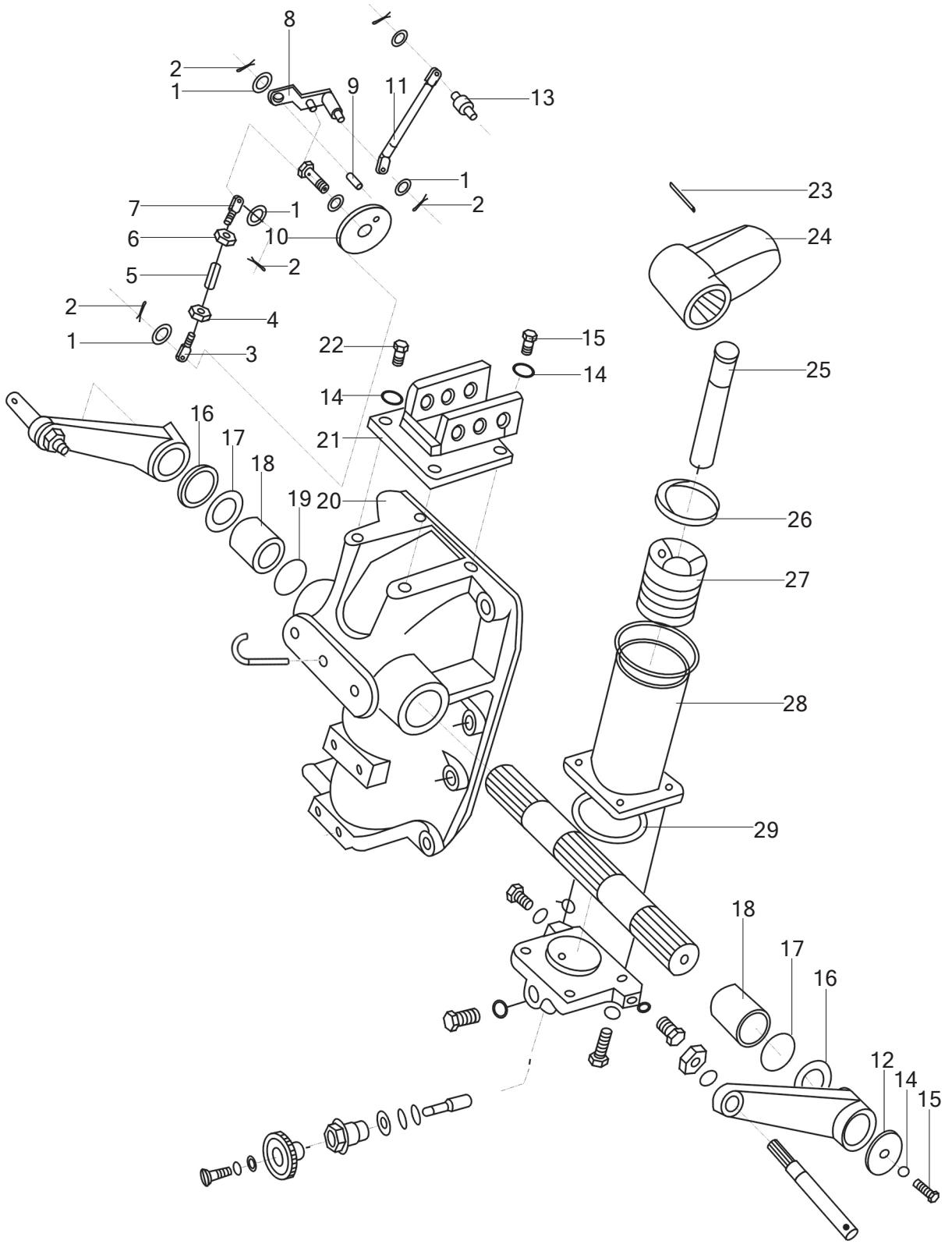
8
2
1
9
11
13
1
2
7
1
6
10
2
5
2
4
1
3
22
15
14
14
21
23
24
25
16
17
18
19
20
26
27
28
29
18
17
16
12
14
15

MUSA Part Number	Ref.	Description of Part	Unit Quantity	Remarks/ Service Bulletin No.
G97858	1	Washer	5	
G9186216	2	Pin	5	
9552402BBB	3	Adjuster(L)	1	
G617286M8L	4	Nut	1	
9552401BBB	5	Tube	1	
G617286M8	6	Nut	1	
9552403BBB	7	Adjuster(R)	1	
9552030BBB01	8	Arm	1	
G87986516	9	Pin	1	
9552020BBB	10	Plate	1	
9552105BBB01	11	Rod	1	
9550107AAA	12	Plate	1	
9552104BBS	13	Pin	1	
G938710	14	Washer	6	
G2176M102588	15	Screw	4	
9550104AAA	16	Sleeve	2	
G1235765057F	17	Seal	2	
9550103AAA	18	Bush	2	
9550102AAA	19	Spacer	2	
9550101BAA01	20	Cover	1	
9550080FBB	21	Bracket	1	
G2176M103088	22	Screw	2	
G87986650	23	Pin	1	
9550108AAA	24	Arm	1	
9550109AAA	25	Rod	1	
9550117BBA	26	Seal D75	1	
9551030BBB01	27	Piston	1	
9550090BAA	28	Cylinder	1	
G1235768031F	29	Seal	1	

Hydraulic Lift Cover

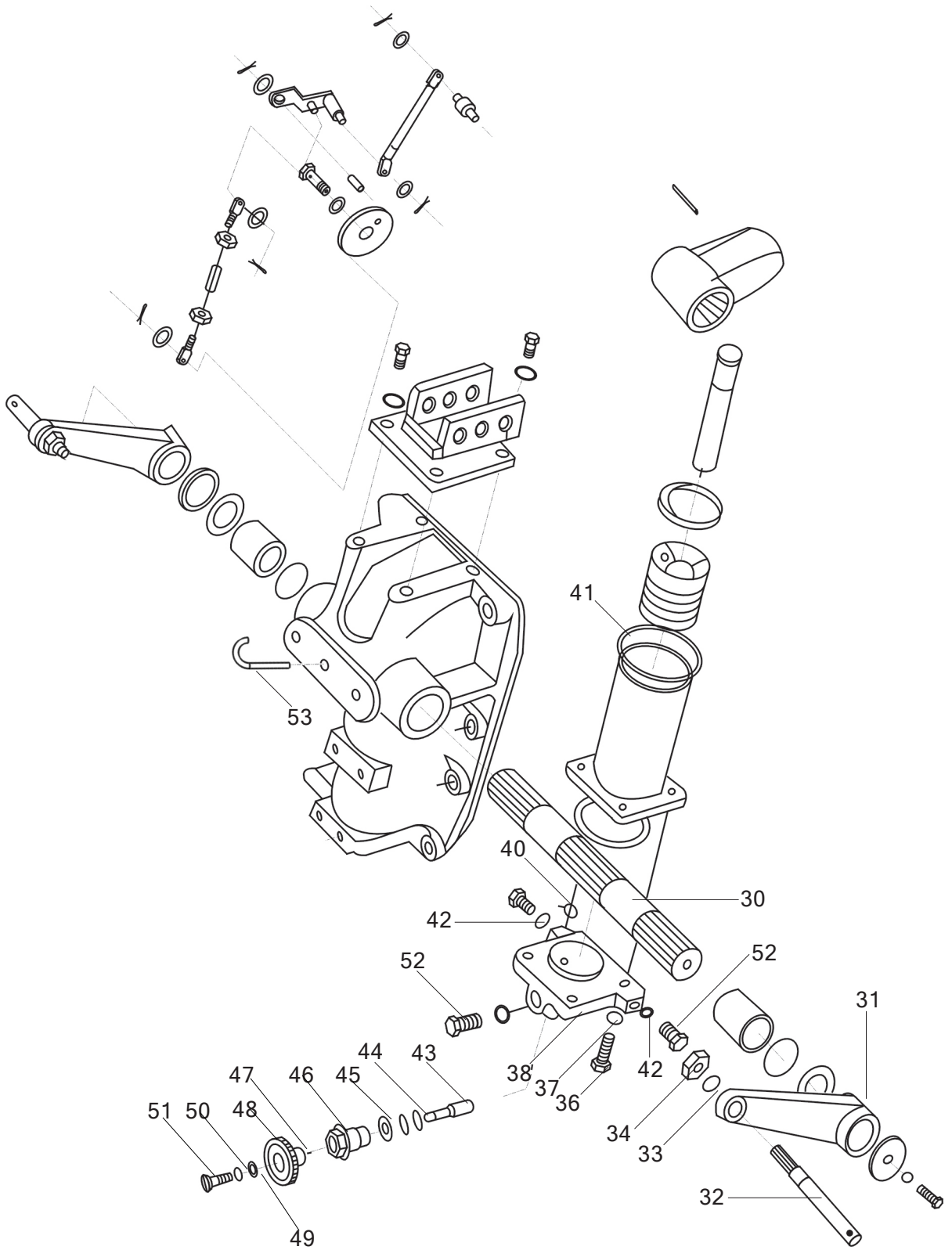

MUSA Part Number	Ref.	Description of Part	Unit Quantity	Remarks/ Service Bulletin No.
9550110BBB01A	30	Shaft	1	GN/01/F08/08
9550106AAA	31	Arm	2	
9550105AAA	32	Pin	2	
G938716	33	Washer	2	
G617086M16	34	Nut	2	
G578386M1455	36	Screw	4	
G938714	37	Washer	4	
9550114BAA	38	Cover	1	
G1235761419F	40	Seal	2	
G1235769531F	41	Seal	1	
710010145	42	Washer	3	
9551201BBA	43	Valve	1	
G1235761019F	44	Seal	2	
J10027722	45	Washer	1	
9550112AAA	46	Nut	1	
9551022BBS	47	Handwheel	1	
9551202BBA	48	Mark	1	
G96854C	49	Washer	1	
G93874	50	Washer	1	
G6785M48	51	Screw	1	
9550113AAA	52	Screw	3	
9550111AAA	53	Pipe	1	

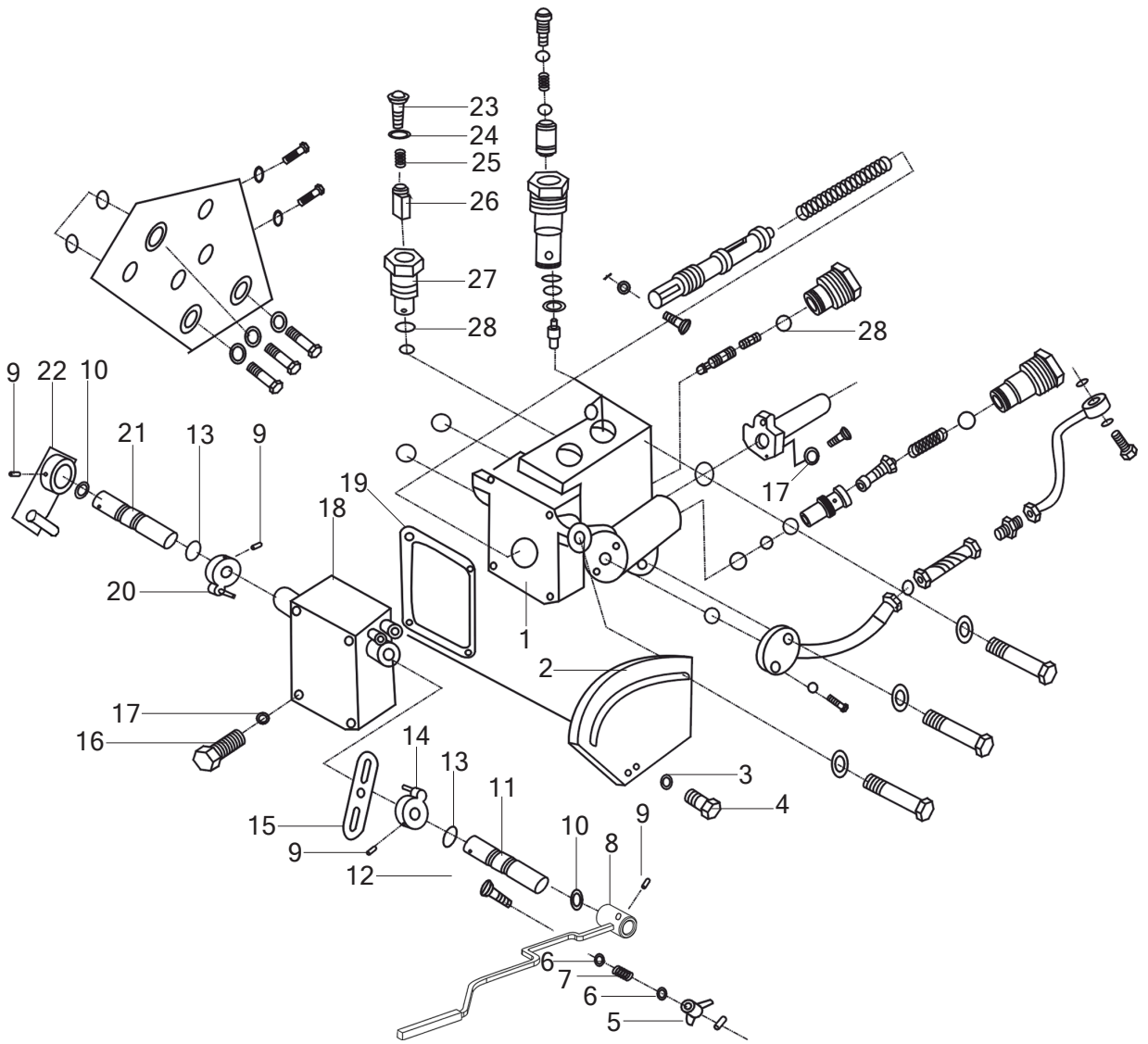
23
24
25
26
27
28
28
9
22
10
21
13
9
19
18
17
20
1
2
17
16
14
13
11
3
4
15
9
10
8
9
12
6
7
6
5

MUSA Part Number	Ref.	Description of Part	Unit Quantity	Remarks/ Service Bulletin No.
T3057115	1	Body	1	
T3057016	2	Quadrant	1	
G8598710	3	Washer	2	
G578386M1016	4	Screw	2	
G6288M6	5	Nut	1	
G97858	6	Washer	2	
T33057123	7	Spring	1	
9570030FBB	8	Lever	1	
G87986524	9	Pin	4	
G895864	10	Ring	2	
T3057108	11	Shaft	1	
T3057124	12	Screw	1	
G34528295265	13	Seal	2	
T3057110	14	Arm	1	
T3057119	15	Lever	1	
T3057121	16	Screw	4	
G93876	17	Washer	7	
T3057117	18	Cover	1	
T3057118	19	Gasket	1	
T3057120	20	Arm	1	
T3057109	21	Shaft	1	
9570020BBB	22	Arm	1	
T3057145	23	Plug	1	
G3452821618	24	Seal	2	
T3057144	25	Spring	1	
T3057142	26	Valve	1	
T3057143	27	Seat	1	
G34528221265	28	Seal	2	

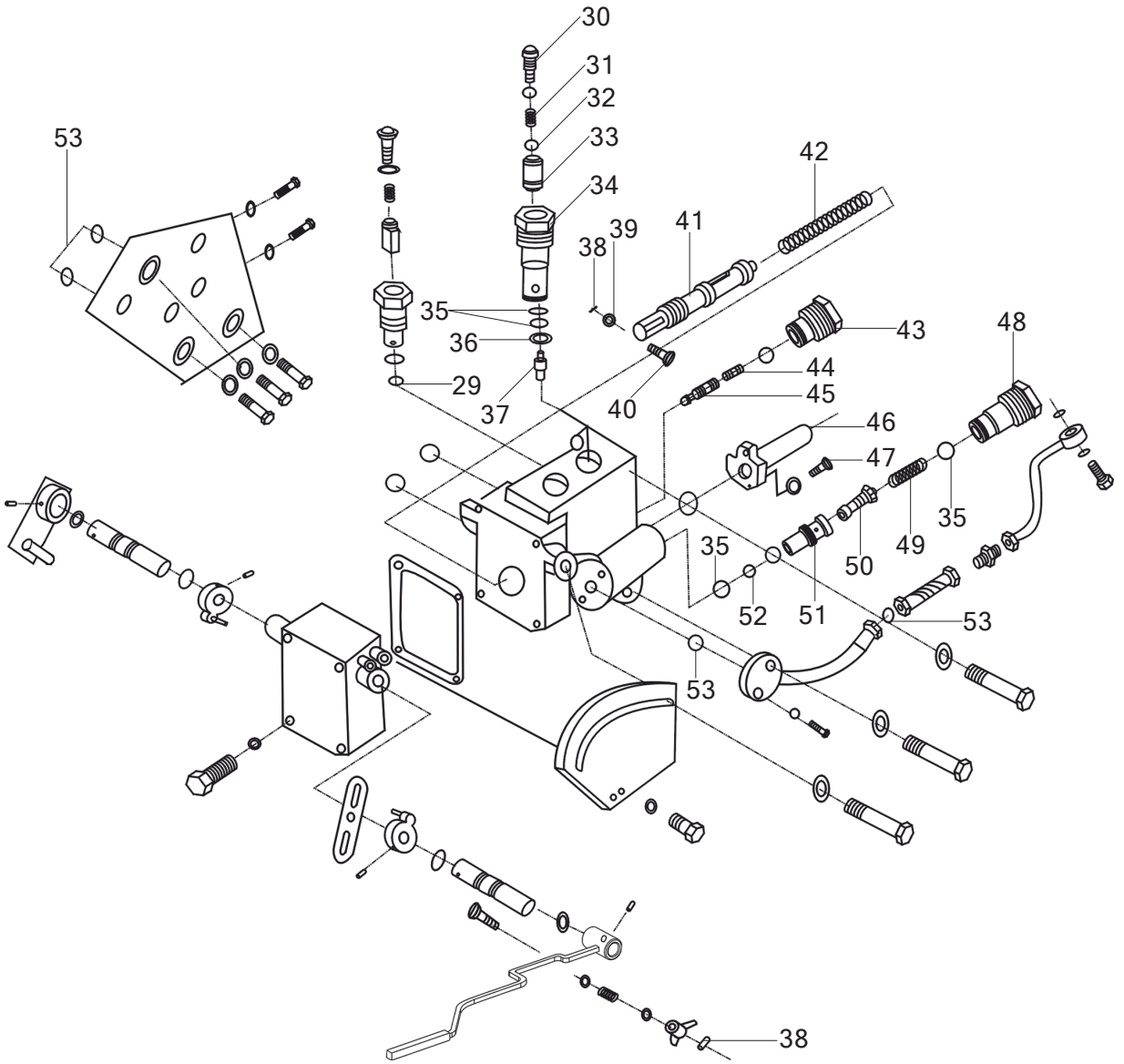
30
31
32
33
34
53
42
41
39
38
35
36
29
37
40
43
44
45
48
46
47
35
49
50
35
52
51
53
53
38

MUSA Part Number	Ref.	Description of Part	Unit Quantity	Remarks/ Service Bulletin No.
G34528215265	29	Seal	1	
T3057137	30	Plug	1	
T3057140	31	Spring	1	
G308895	32	Ball	1	
T3057139	33	Valve	1	
T3057138	34	Sleeve	1	
G34528219265	35	Seal	5	
T3057159161	36	Shims	A.R.	
T3057114	37	Pin	1	
G9186212	38	Pin	2	
G97856	39	Washer	1	
T3057125	40	Pin	1	
T3057122	41	Spool	1	
T3057112	42	Spring	1	
T3057102	43	Plug	1	
T3057103	44	Spring	1	
T3057104	45	Valve	1	
T3057113	46	Cover	1	
G6585M616	47	Screw	3	
T3057105	48	Seat	1	
T3057106	49	Spring	1	
T3057107	50	Valve	1	
T3057127	51	Seat	1	
T3057128	52	Plug	1	
G1235761624F	53	Seal	4	

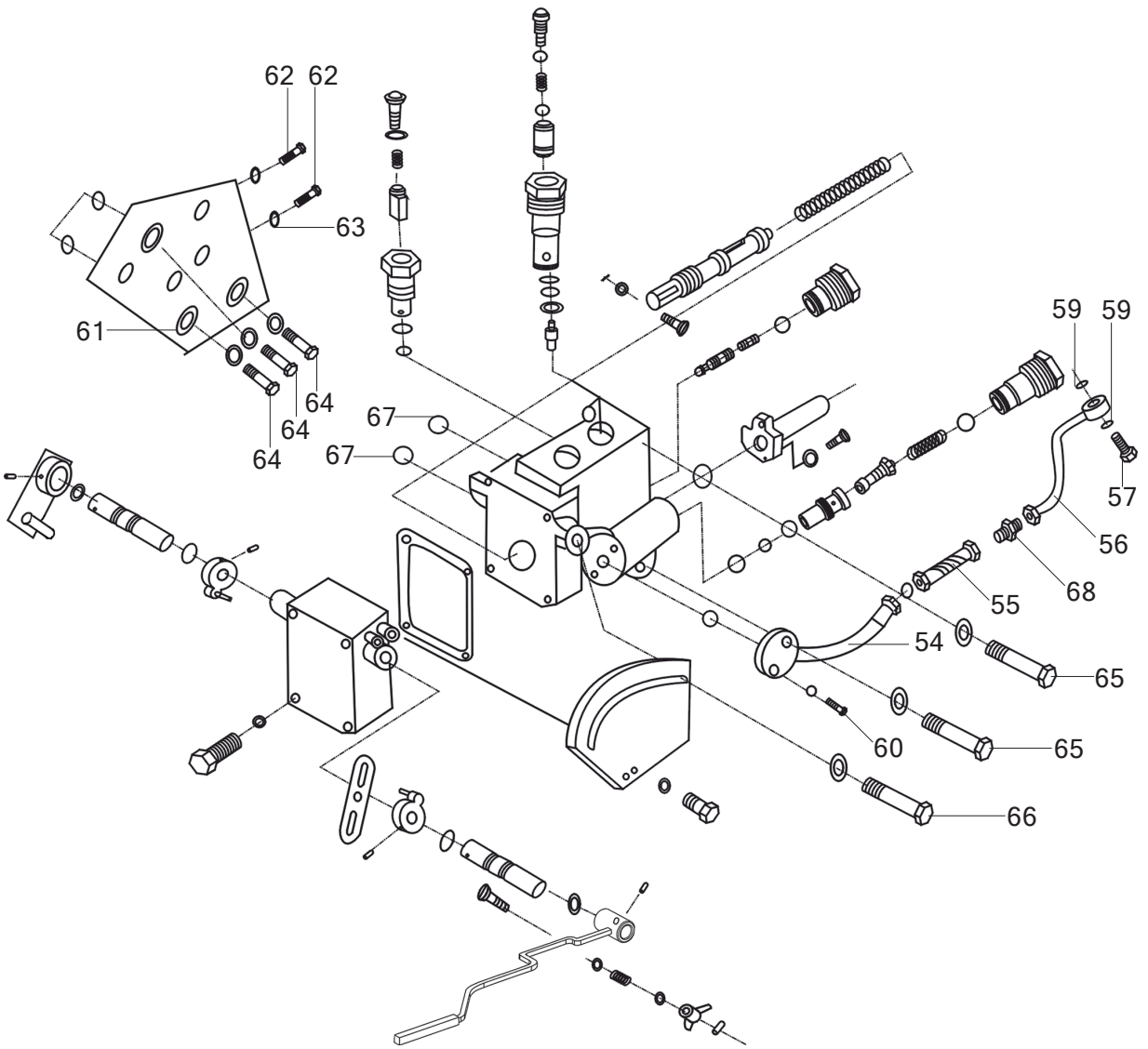
62
62
63
61
64
64
64
67
67
59
59
57
56
68
55
54
65
60
65
66

MUSA Part Number	Ref.	Description of Part	Unit Quantity	Remarks/ Service Bulletin No.
9550033BBS	54	Pipe	1	
9550032FBB	55	Pipe	1	
9550031BBS	56	Pipe	1	
9550307BBD	57	Screw	1	
G93878	58	Washer	8	
J9827720	59	Washer	2	
G578386M840	60	Screw	2	
9552101BBB	61	Spacer	1	
9550113AAA	62	Plug	2	
710010145	63	Washr	2	
G7085M835	64	Screw	3	
9552102BBB	65	Screw	2	
9552103BBB	66	Screw	1	
G345282118265F	67	Seal	2	
9550308BBB	68	Joint	1	

Three Point Linkage

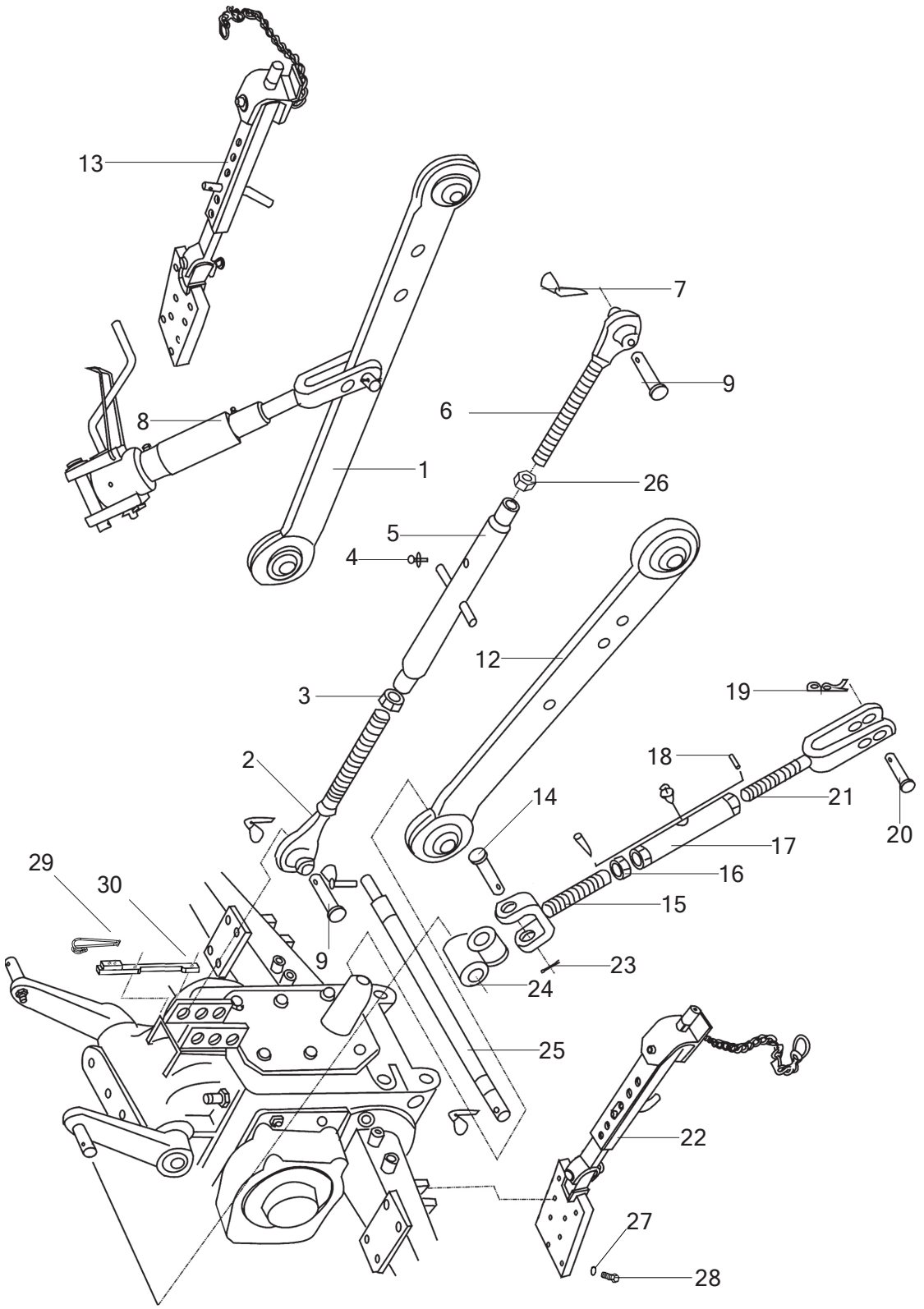

MUSA Part Number	Ref.	Description of Part	Unit Quantity	Remarks/ Service Bulletin No.
9560040BAA	1	Link	1	
9560021BBA	2	Toggle	1	
G617286M22	3	Nut	1	
G115289M6	4	Nipple	5	
9560022BBA	5	Tube	1	
9560023BBA	6	Toggle	1	
9350030AAA	7	Pin	8	
9561030BBB01	8	Right Lift Rod Assy	1	
9560102AAA	9	Pin	2	
G938716	10	Washer	2	
G617086M16	11	Nut	2	
9560060BAA	12	Link	1	
9560070EBC	13	Bilateral Chain(R)	1	
G88286B1675	14	Pin	1	
9560031BBA	15	Yoke	1	
G617286M20	16	Nut	1	
9560032BBA	17	Tube	1	
G87986320	18	Pin	2	
9560105AAA01	19	Pin	2	
G88286B1645	20	Pin	2	
9560033BBA	21	Fork	1	
9560050EBC	22	Bilateral Chain(L)	1	
G9186430	23	Pin	1	
9560101AAA	24	Knuckle	2	
9560104AAA	25	Shaft	1	
G617286M22L	26	Nut	1	
G938712	27	Washer	8	
9560107FBB	29	Pothook	1	
9560090FBB	30	Bracket	1	

Hydraulic Pump & Pipes

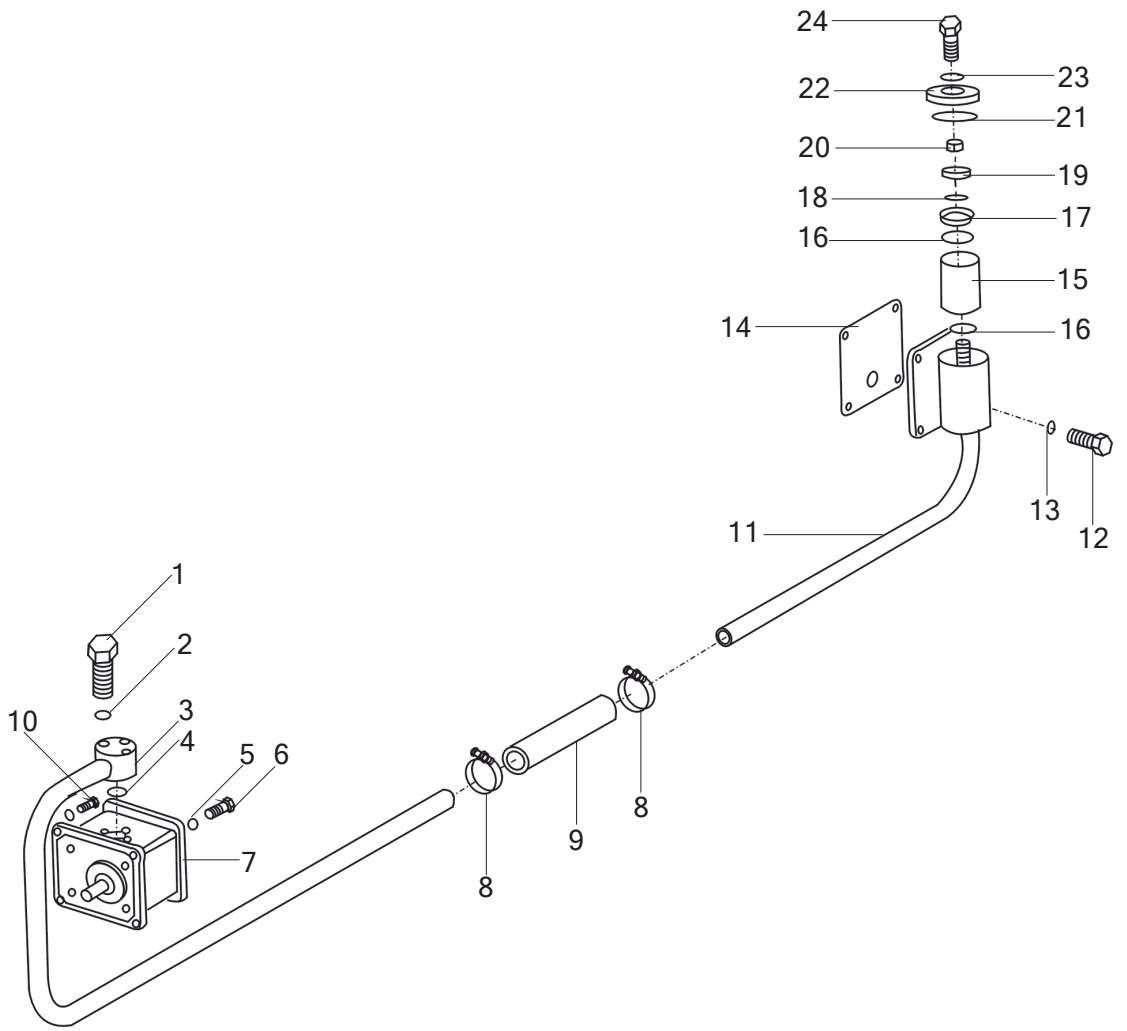

MUSA Part Number	Ref.	Description of Part	Unit Quantity	Remarks/ Service Bulletin No.
G578286M845	1	Screw	3	
G93878	2	Washer	7	
9580020BBS	3	Pipe	1	
G1235762224F	4	Seal	1	
G93878	5	Washer	4	
G578286M835	6	Screw	2	
9580050BBS	7	Pump	1	
HGO92751	8	Clip	2	
H454867862535180	9	Pipe	1	
G578286M850	10	Screw	2	
9580031BBB	11	Filter	1	
G578386M1025	12	Screw	4	
G938710	13	Washer	4	
9380108AAA	14	Washer	1	
9540052BBS	15	Element	1	
G1235764035	16	Seal	2	
9580318BAB	17	Cover	1	
9580319BAB	18	Seal	1	
9580322BAB	19	Seat	1	
G617186M101	20	Nut	1	
9580317BAB	21	Seal	1	
9580323BAB	22	Cover	1	
9580321BAB	23	Washer	1	
9580320BAB	24	Screw	1	

MAHINDRA
TRACTORS

Attachments

Attachments

Swinging Drawbar

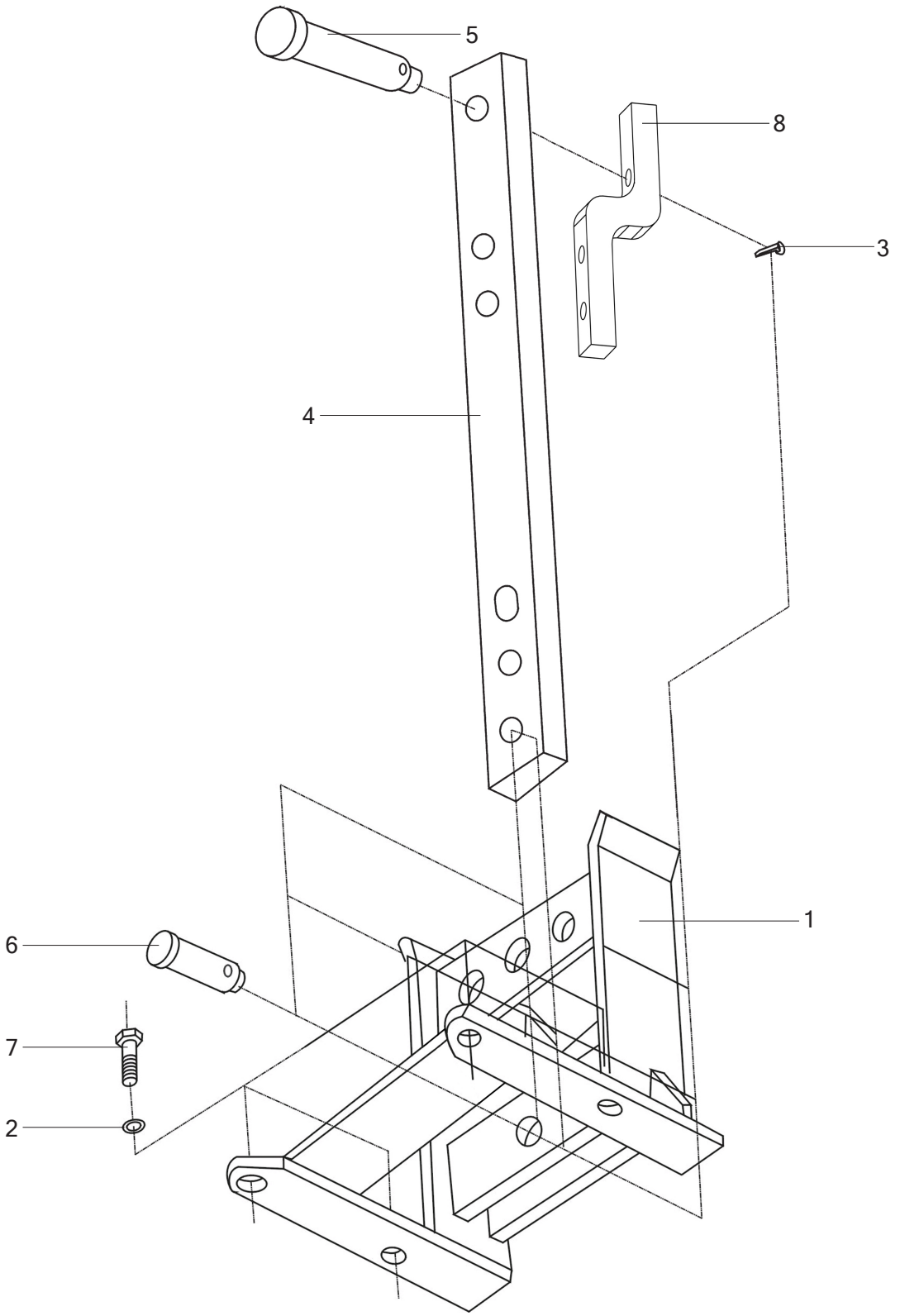

MUSA Part Number	Ref.	Description of Part	Unit Quantity	Remarks/ Service Bulletin No.
9350020ABA	1	Frame	1	
G938716	2	Washer	4	
9350030AAA	3	Linchpin	4	
9350102FBB	4	Bar	1	
9350401BBB	5	Pin	1	
9350101ABA	6	Pin	3	
G578386M1640	7	Bolt	4	
9350103FBB	8	Drawbar clip	1	

Front Weight

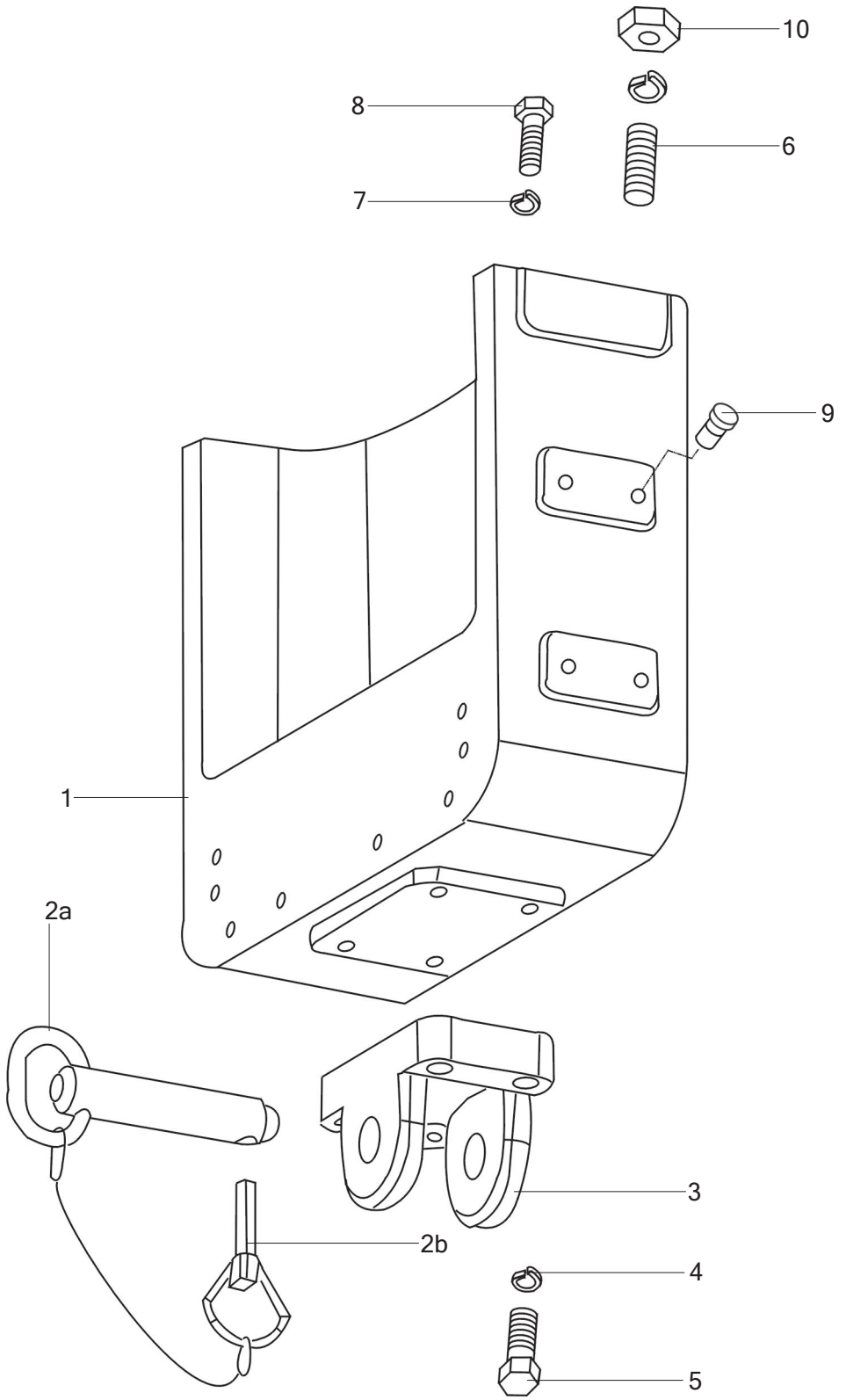

MUSA Part Number	Ref.	Description of Part	Unit Quantity	Remarks/ Service Bulletin No.
9740101BBQ	1	Weight	1	
9740040FBB	2a	Pin	1	
9740030BBA	2b	Lock pin assembly	1	
9740102FBB	3	Drawbar	1	
12G87-93	4	Washer	4	
M12x60G86-5782	5	Bolt	4	
G89888AM163088	6	Stud	2	
G938716	7	Washer	4	
G578386M1640	8	Screw	2	
1023015DAH	9	Rubber plug	4	
G617086M16	10	Nut	2	